BELLSING

A leading provider of acoustic solutions

Bellsing Product Brochure 2024

Shenzhen Bellsing Acoustic Technology Co., Ltd.

Tel: 0755-8666 5686 Fax: 0755-8666 5689 Website: www.bellsing.com
Product sales email: sales@bellsing.com Marketing email: marketing@bellsing.com
Office Address: Room 1408A, Satellite Building, No. 61, Gaoxin South 9th Road, Nanshan District, Shenzhen

Suzhou Bellsing Acoustic Technology Co., Ltd.

Tel: 0512-6283 4537 Fax: 0512-6283 4532
Office address: No. 668, Fengting Avenue, Suzhou Industrial Park, Jiangsu Province

www.bellsing.com

Version 240416

©2024 Bellsing Acoustics All Rights Reserved

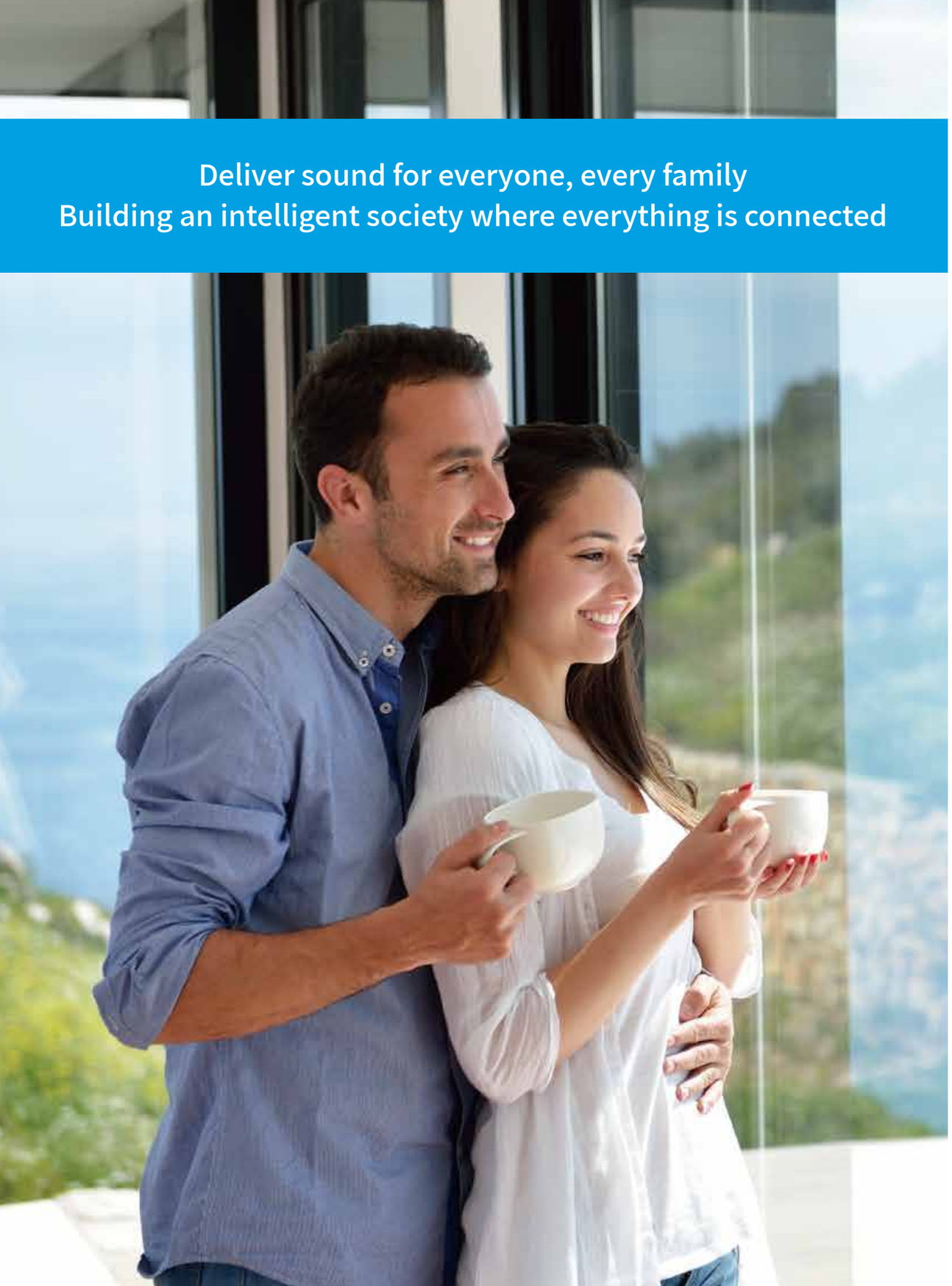

Table of contents

About Bellsing 02

Balanced Armature Receiver 05

Planar Driver 54

Dynamic Receiver 57

Hybrid Modules 65

RIC Module 67

Accessories 70

Customer Service 73

Appendix 75

All copyrights are reserved by Shenzhen Bellsing Acoustic Technology Co., Ltd. Without Bellsing written permission, no company or individual is allowed to extract or copy any of this catalogue, and shall not spread it in any form. Bellsing reserve the right to update this catalogue.

BELLSING

Is the trademark of Shenzhen Bellsing Acoustic Technology Co., Ltd. and cannot be counterfeited.

BELLSING

A leading provider of acoustic solutions

Position in the Industry

- Top three in the world; China's first balanced armature receiver manufacturer
- Breaking the monopoly held by European and American companies in this industry for more than 70 years
- Customers include industry leaders in more than 25 countries

More than 500 Patents and Patent Applications

Vision

Become the leading supplier of balanced armature receivers and related acoustic solutions

Mission

Facilitating human interaction with sound

Values

customer-centric
innovation oriented

Company Profile

Bellsing is one of the world's leading suppliers of balanced armature receivers and related acoustic solutions, dedicated to the global hearing aid industry, consumer electronics (TWS, smart wearable devices, high-end wired headphones, In-Ear Monitors), emergency services and communications industries to provide acoustic components, solutions and professional services. The business covers more than 25 countries around the world.

Bellsing has always focused on the innovation and layout of core technologies in the acoustic field.
In Shenzhen, China Bellsing has established a global operation with a sales center, Research and Development center and customer service center for global distribution. There is also a production center in Suzhou, China, all providing high-quality services to global customers.

In the future, Bellsing will continue to provide the most valuable solutions and professional services for global customers, and work with customers to cope with the development and challenges of the intelligent era.

The History of Bellsing

2023

- Exclusive supplier of balanced armature receivers to leading TWS supplier
- Automation is in operation and a full range of balanced armature products introduced
- Invested in building a dynamic speaker automatic production line
- Initiated the next generation of acoustic device and sensor device research and development

2019

The first-generation consumer-grade automated production line is officially commercialized

· Released consumer-grade BTC series balanced armature receivers

2017

· Acquisition of Molex balanced armature receiver automatic production line

· Release of custom RIC hearing aid solutions

2020

- Become the exclusive supplier of balanced armature receivers for leading supplier of TWS products
- Jointly developed consumer-grade second-generation automated production lines with Everwin Precision
- The product line was extended, and the industry's first hybrid module (dynamic speaker & balanced armature receiver) launched.

2018

Large-scale breakthroughs in top audio manufacturers in Europe and America

· Release of customized multi-unit module solutions

· Invested in building a consumer-grade first-generation automation line for balanced armature receivers

2014

Shenzhen Bellsing was established

· Released the first balanced armature receiver series the BRC 330

Balanced Armature Receivers

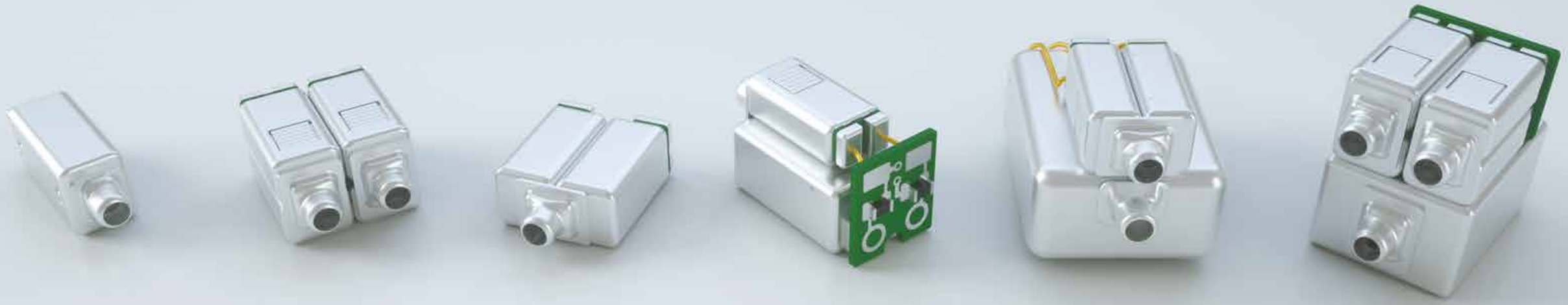

Bellsing offer a wide range of Balanced Armature Receivers which are ideal for both the consumer and hearing aid industries

Balanced Armature Receivers

Image	Series	Dimensions (mm)	Bandwidth	Pages
Single Balanced Armature Receivers (BRC)				
	BRC305	5.02*2.69*1.94	HF/UHF	09
	BRC310	5.02*2.69*1.94	Medium/high freq.	11
	BRC330	5.06*2.73*2.58	Medium/high freq.	13
	BRC350	5.15*2.96*2.58	Full Range	15
	BRC540	6.26*4.27*2.99	Full Range	17
	BRC730	7.87*4.11*2.79	Full Range	20
	BRC740	7.90*4.11*2.79	Medium/low freq.	21
	BRC770	7.77*5.49*4.00	Medium/low freq.	22
	BRC910	9.42*7.14*4.10	Low frequency	23
Single Automatable Balanced Armature Receiver (BTC)				
NEW	BTC300	4.06*2.69*1.94	HF/UHF	24
	BTC305	5.02*2.69*1.94	HF/UHF	25
	BTC310	5.02*2.69*1.94	Medium/high freq.	27
	BTC350	5.15*2.96*2.58	Full Range	28
	BTC540	6.26*4.27*2.99	Full Range	30
Dual Balanced Armature Receiver (BRC)				
	BRC200	5.93*2.51*3.10	Medium/high freq.	31
	BRC205	5.02*2.69*3.87	HF/UHF	33
	BRC210	5.02*2.69*3.87	Medium/high freq.	35
	BRC215	5.02*2.69*3.87	Medium/high freq.	37
	BRC231	5.06*2.73*5.16	Full Range	39
	BRC630	7.89*5.59*4.11	Medium/low freq.	41
NEW	BRC640	7.90*5.59*4.11	Low frequency	42
Dual Automatable Balanced Armature Receiver (BTC)				
NEW	BTC202	4.06*2.69*3.87	HF/UHF	43
NEW	BTC205	5.02*2.69*3.87	HF/UHF	44
NEW	BTC231	5.06*2.73*5.16	Full Range	45

Image	Series	Dimensions (mm)	Bandwidth	Pages
Quad Balanced Armature Receiver (BRC)				
	BRC206	5.02*3.87*5.38	HF	46
	BRC232	5.15*5.16*5.92	Full Range	47
Quad Automatable Balanced Armature Receiver (BTC)				
NEW	BTC204	4.06*5.38*3.87	Full Range	48
Multi-Driver Balanced Armature Receivers (BRC)				
	BRC260	6.26*4.93*4.27	Full Range	49
	BRC280	9.42*6.79*7.14	Full Range	50
	BRC281	9.42*7.97*7.14	Full Range	51
	BRC283	7.9*5.59*7.98	Full Range	52
NEW	BRC290	9.42*7.14*7.09	Full Range	53

5.02*2.69*1.94mm

305 Series

Miniature balanced-armature receiver with stainless steel case for using in headset applications, CIC (Complete In the Canal) and IIC (Invisible In the Canal) applications with standard response, can also be used in commercial hearing devices. The wide bandwidth version pushes the boundaries of high-frequency performance.

Dimensions (mm)

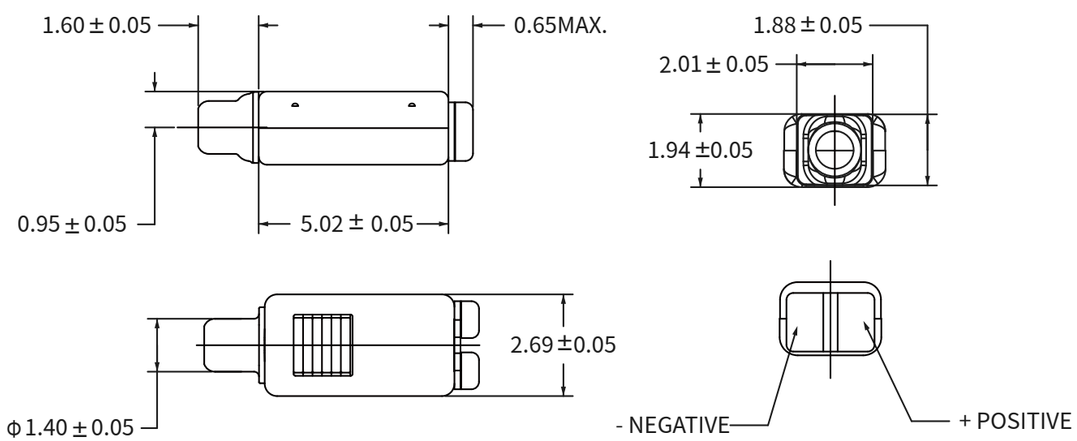

Single Balanced Armature Receivers (BRC)

BRC305C90012

DCR	12.5Ω
Sensitivity	94.5dB@1000Hz
MPO @ peak	125.0dB
Nominal Drive	94mV RMS
Acoustic Load	10.0mm x 1.0mm tubing into IEC711
Port Location	12S
Back vent	NO

Frequency response curve

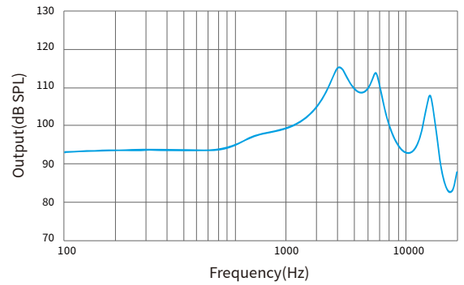

BRC305C90100

DCR	100.0Ω
Sensitivity	94dB@1000Hz
MPO @ peak	125.0dB
Nominal Drive	211mV RMS
Acoustic Load	10.0mm x 1.0mm tubing into IEC711
Port Location	12S
Back vent	NO

Frequency response curve

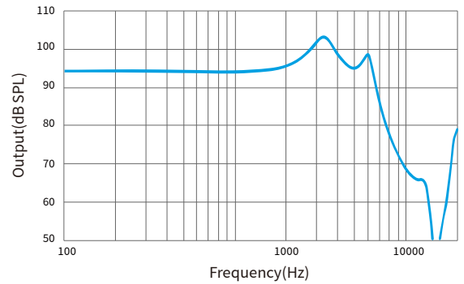

BRC305C70012

DCR	12.5Ω
Sensitivity	95dB@1000Hz
MPO @ peak	125.0dB
Nominal Drive	94mV RMS
Acoustic Load	10.0mm x 1.0mm tubing into IEC711
Port Location	12S
Back vent	NO

Frequency response curve

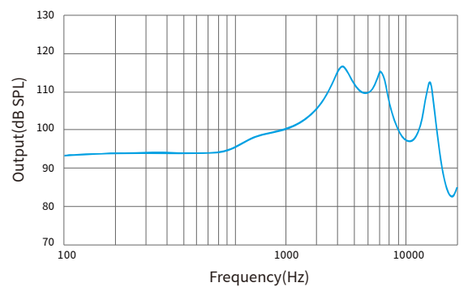

5.02*2.69*1.94mm

310 Series

Miniature balanced-armature receiver with stainless steel case for using in CIC (Complete In the Canal) and IIC (Invisible In the Canal) applications with standard response, can also be used in commercial hearing devices, headset applications.

Dimensions (mm)

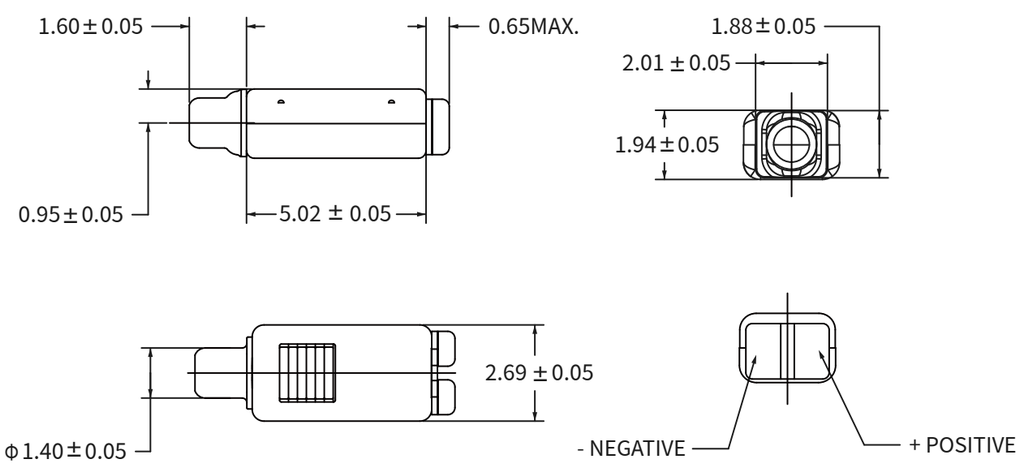

BRC310C90025

DCR	25.0Ω
Sensitivity	100.0dB@1000Hz
MPO @ peak	123.0dB
Nominal Drive	85mV RMS
Acoustic Load	10.0mm x 1.0mm tubing into IEC711
Port Location	12S
Back vent	NO

Frequency response curve

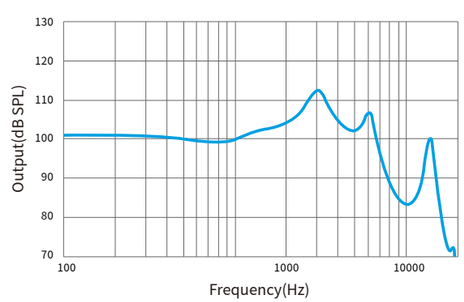

Single Balanced Armature Receivers (BRC)

BRC310C90026

DCR	25.0Ω
Sensitivity	100.0dB@1000Hz
MPO @ peak	123.0dB
Nominal Drive	85mV RMS
Acoustic Load	10.0mm x 1.0mm tubing into IEC711
Port Location	12S
Back vent	YES

Frequency response curve

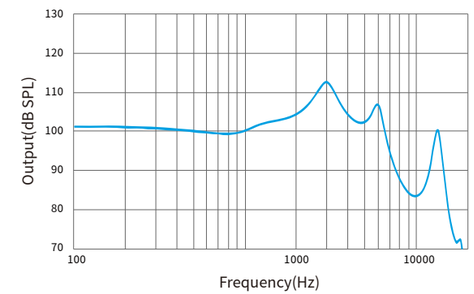

BRC310H90050

DCR	50.0Ω
Sensitivity	100.5dB@1000Hz
MPO @ peak	123.0dB
Nominal Drive	110mV RMS
Acoustic Load	10.0mm x 1.0mm tubing into IEC711
Port Location	12S
Back vent	NO

Frequency response curve

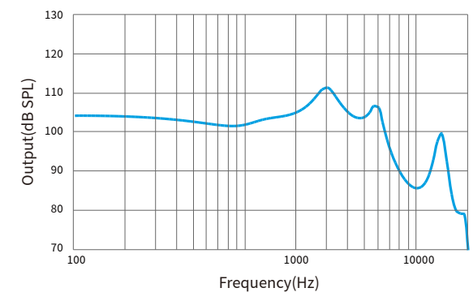

BRC310H90200

DCR	200.0Ω
Sensitivity	100.0dB@1000Hz
MPO @ peak	123.0dB
Nominal Drive	241mV RMS
Acoustic Load	10.0mm x 1.0mm tubing into IEC711
Port Location	12S
Back vent	NO

Frequency response curve

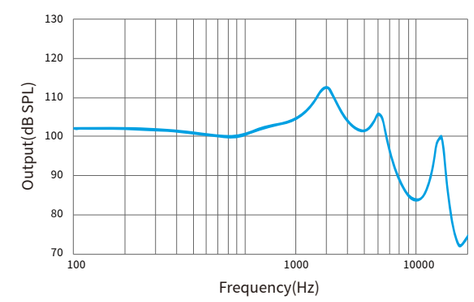

BRC310H90360

DCR	360.0Ω
Sensitivity	95.5dB@1000Hz
MPO @ peak	123.0dB
Nominal Drive	280mV RMS
Acoustic Load	10.0mm x 1.0mm tubing into IEC711
Port Location	12S
Back vent	NO

Frequency response curve

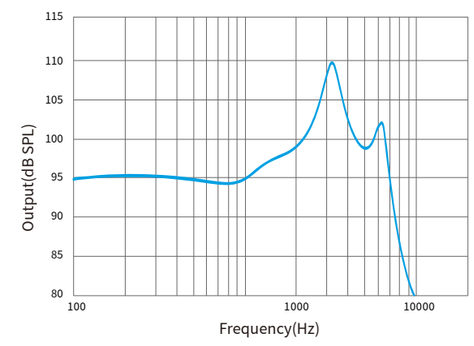

5.06*2.73*2.58mm

330 Series

Advanced Miniature balanced-armature (AMBA) receiver with magnetic-radiation shielding for use in ITE (In The Ear) , CIC (Complete In the Canal) and IIC (Invisible In the Canal) , headset applications with standard response.

Dimensions (mm)

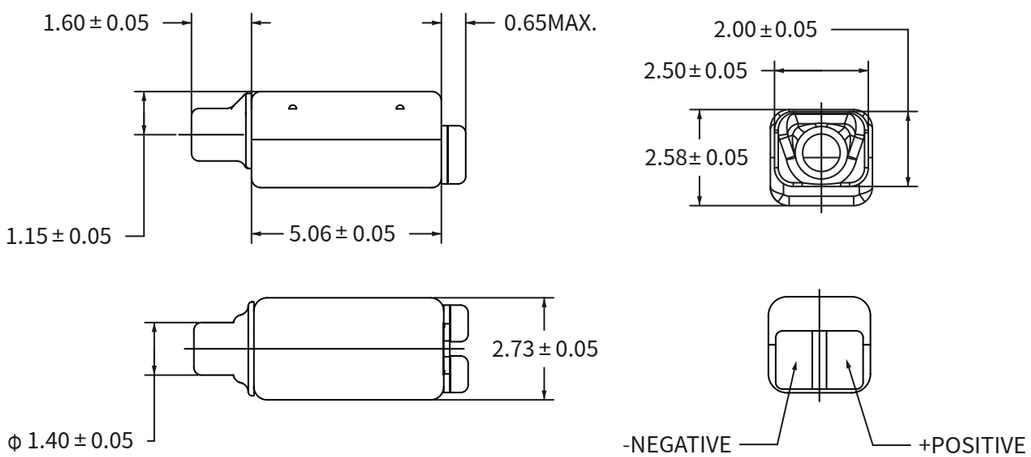

Single Balanced Armature Receivers (BRC)

BRC330C90022

DCR	22.0Ω
Sensitivity	98.5dB@1000Hz
MPO @ peak	124.0dB
Nominal Drive	115mV RMS
Acoustic Load	10.0mm x 1.0mm tubing into IEC711
Port Location	12C
Back vent	NO

Frequency response curve

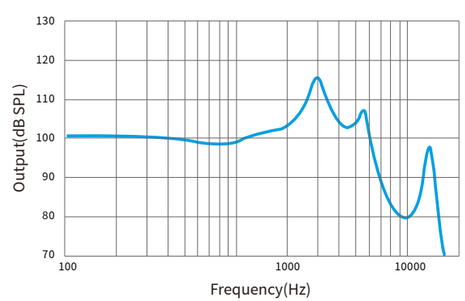

BRC330H90120

DCR	120.0Ω
Sensitivity	101.5dB@1000Hz
MPO @ peak	124.0dB
Nominal Drive	179mV RMS
Acoustic Load	10.0mm x 1.0mm tubing into IEC711
Port Location	12C
Back vent	NO

Frequency response curve

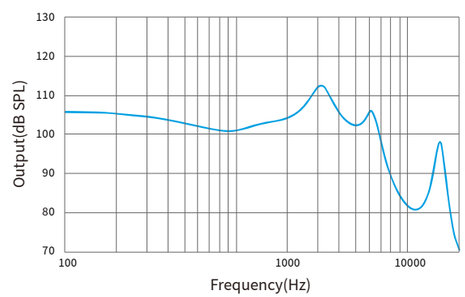

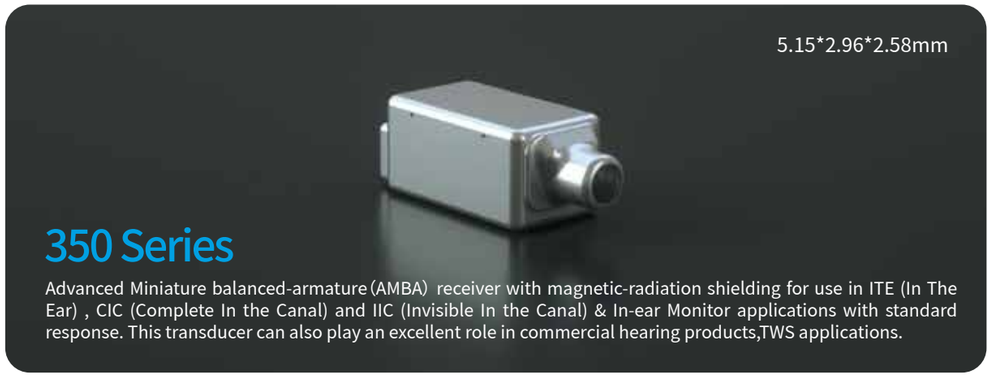

Dimensions (mm)

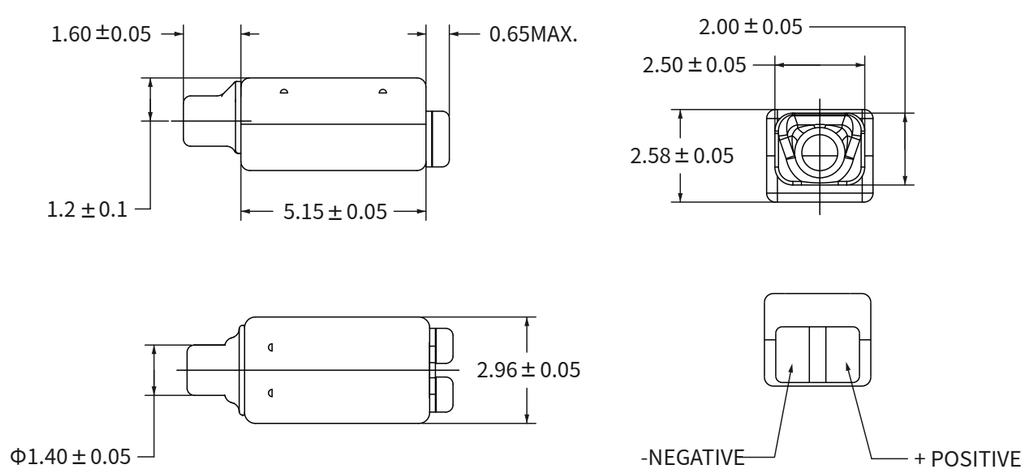

BRC350H90154

DCR	154.0Ω
Sensitivity	106.0dB@1000Hz
MPO @ peak	124.0dB
Nominal Drive	287mV RMS
Acoustic Load	10.0mm x 1.0mm tubing into IEC711
Port Location	12C
Back vent	NO

Frequency response curve

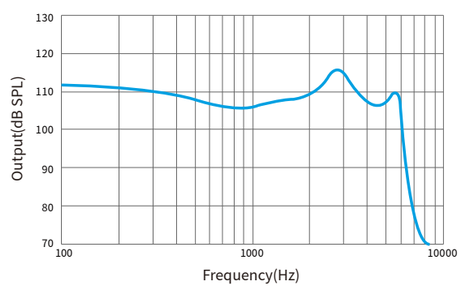

Single Balanced Armature Receivers (BRC)

BRC350C70022

DCR	22.0Ω
Sensitivity	106.0dB@1000Hz
MPO @ peak	124.0dB
Nominal Drive	120mV RMS
Acoustic Load	10.0mm x 1.0mm tubing into IEC711
Port Location	12C
Back vent	NO

Frequency response curve

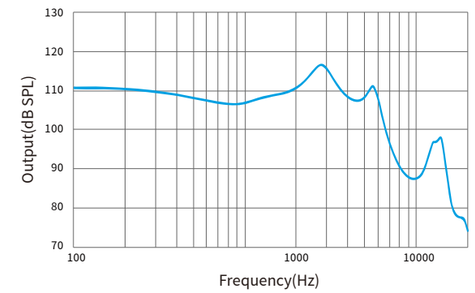

BRC350C90022

DCR	22.0Ω
Sensitivity	106.0dB@1000Hz
MPO @ peak	124.0dB
Nominal Drive	120mV RMS
Acoustic Load	10.0mm x 1.0mm tubing into IEC711
Port Location	12C
Back vent	YES

Frequency response curve

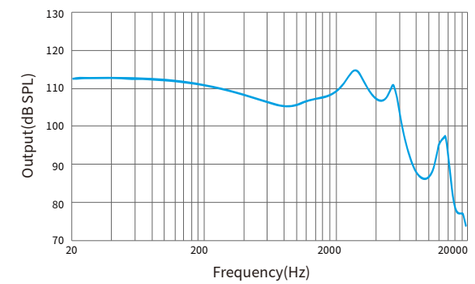

BRC350H90023

DCR	22.0Ω
Sensitivity	106.0dB@1000Hz
MPO @ peak	124.0dB
Nominal Drive	120mV RMS
Acoustic Load	10.0mm x 1.0mm tubing into IEC711
Port Location	12C
Back vent	NO

Frequency response curve

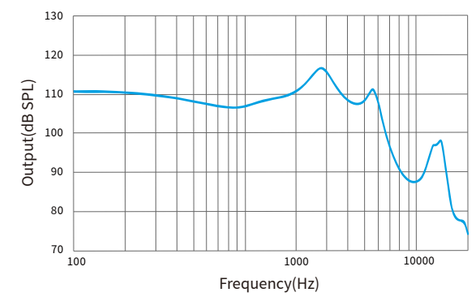

BRC350C71022

DCR	22.0Ω
Sensitivity	106.0dB@1000Hz
MPO @ peak	124.0dB
Nominal Drive	120mV RMS
Acoustic Load	10.0mm x 1.0mm tubing into IEC711
Port Location	12C
Back vent	YES

Frequency response curve

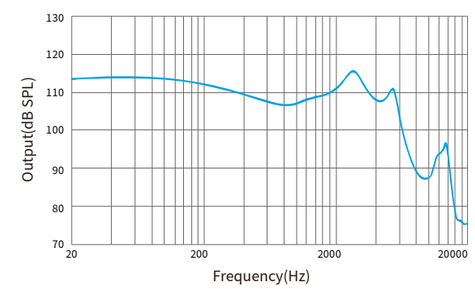

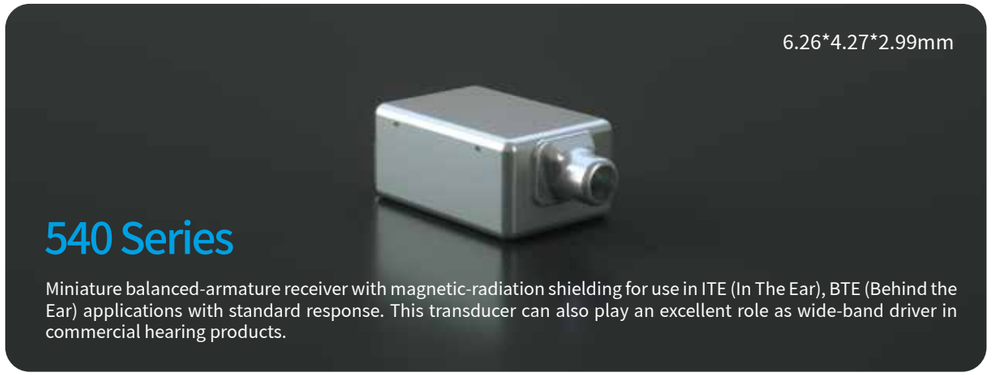

Dimensions (mm)

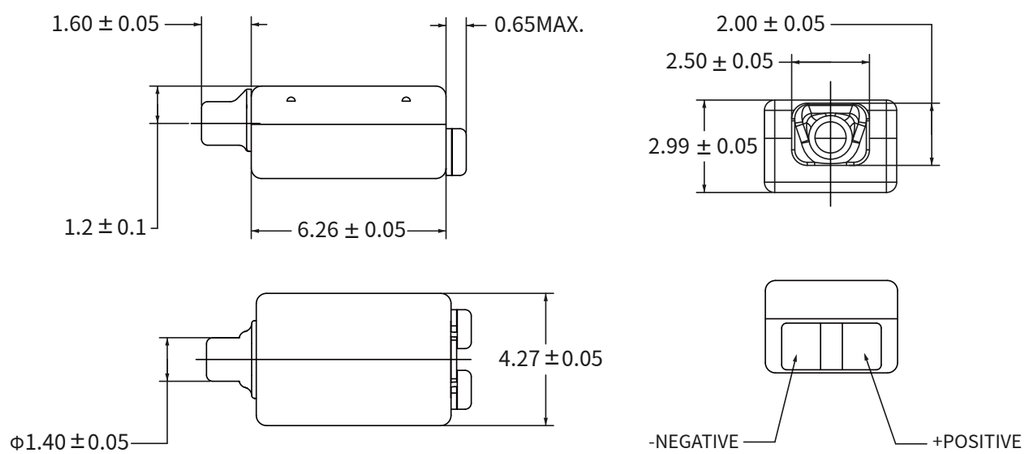

BRC540H90027

DCR	25.0Ω
Sensitivity	108.0dB@1000Hz
MPO @ peak	128.0dB
Nominal Drive	146mV RMS
Acoustic Load	10.0mm x 1.0mm tubing into IEC711
Port Location	12C
Back vent	NO

Frequency response curve

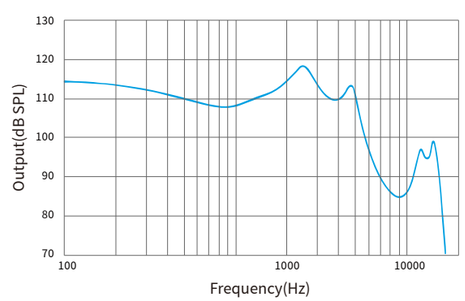

Single Balanced Armature Receivers (BRC)

BRC540H90127

DCR	127.0Ω
Sensitivity	104.5dB@1000Hz
MPO @ peak	128.0dB
Nominal Drive	220mV RMS
Acoustic Load	10.0mm x 1.0mm tubing into IEC711
Port Location	12C
Back vent	NO

Frequency response curve

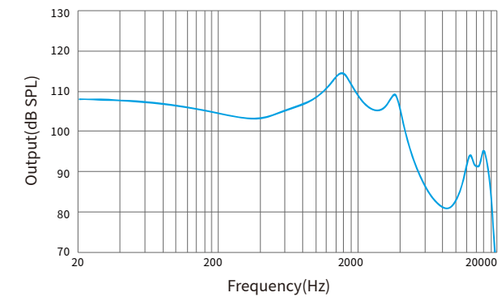

BRC540C70004

DCR	4.0Ω
Sensitivity	110.5dB@1000Hz
MPO @ peak	128.0dB
Nominal Drive	70mV RMS
Acoustic Load	10.0mm x 1.0mm tubing into IEC711
Port Location	12C
Back vent	NO

Frequency response curve

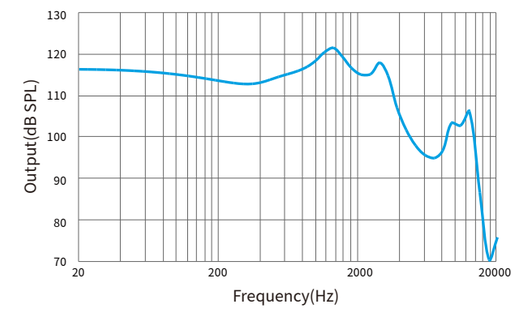

BRC540C70005

DCR	4.0Ω
Sensitivity	110.5dB@1000Hz
MPO @ peak	128.0dB
Nominal Drive	70mV RMS
Acoustic Load	10.0mm x 1.0mm tubing into IEC711
Port Location	12C
Back vent	YES

Frequency response curve

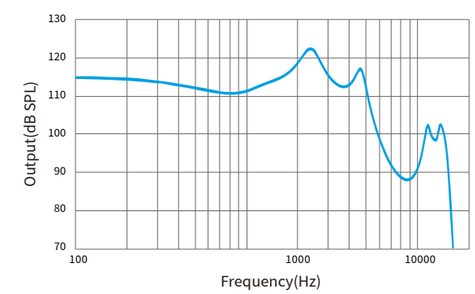

BRC540C90004

DCR	4.0Ω
Sensitivity	110.5dB@1000Hz
MPO @ peak	128.0dB
Nominal Drive	70mV RMS
Acoustic Load	10.0mm x 1.0mm tubing into IEC711
Port Location	12C
Back vent	NO

Frequency response curve

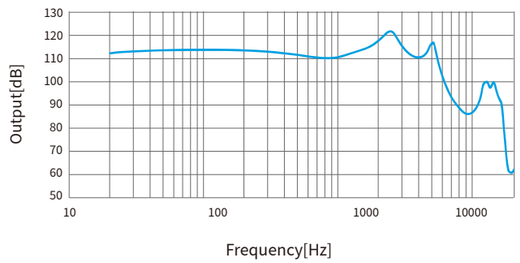

BRC540H90196

DCR	196.0Ω
Sensitivity	103.0dB@1000Hz
MPO @ peak	128.0dB
Nominal Drive	220mV RMS
Acoustic Load	10.0mm x 1.0mm tubing into IEC711
Port Location	12C
Back vent	NO

Frequency response curve

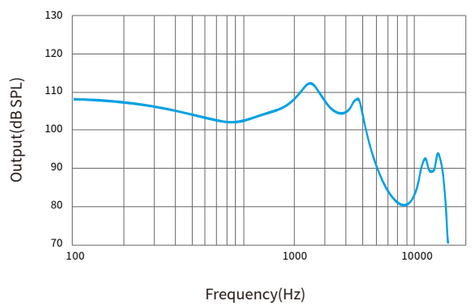

Single Balanced Armature Receivers (BRC)

Dimensions (mm)

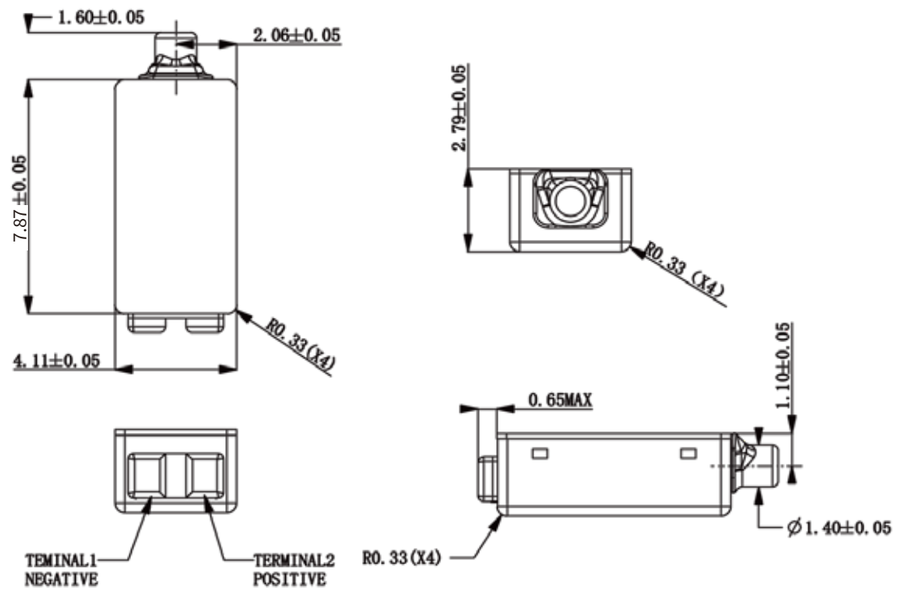

BRC730H90025

DCR	25.0Ω
Sensitivity	106.0dB@500Hz
MPO @ peak	117.5dB
Nominal Drive	110mV RMS
Acoustic Load	10.0mm x 1.0mm tubing into 2CC
Port Location	12C
Back vent	NO

Frequency response curve

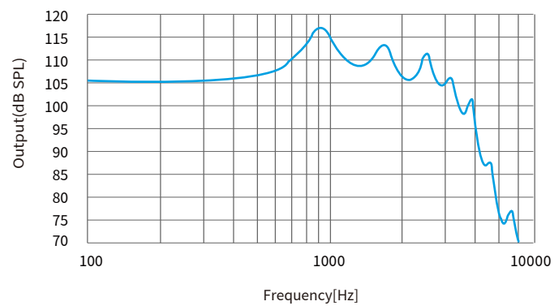

Dimensions (mm)

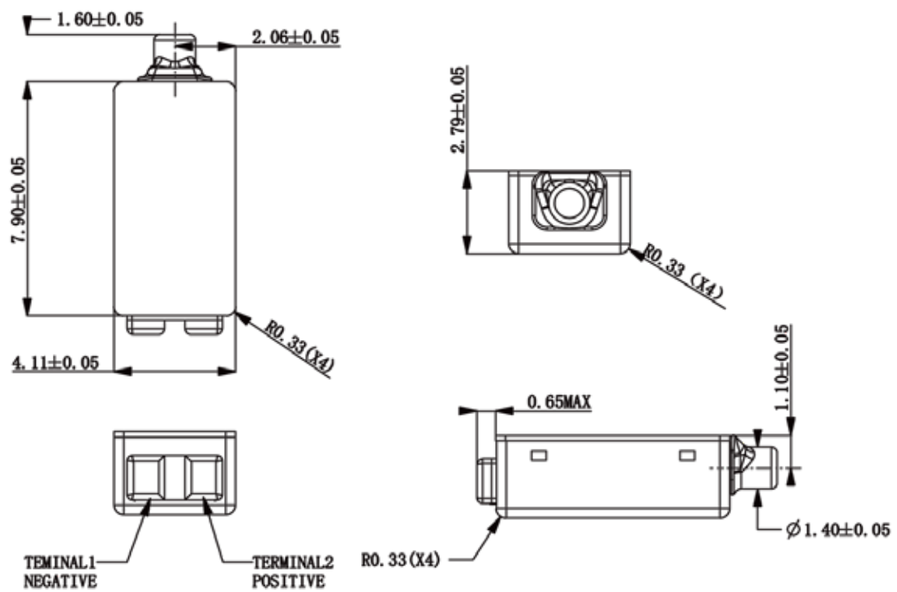

BRC740C90025

DCR	25.0Ω
Sensitivity	112.5dB@1000Hz
MPO @ peak	120.5dB
Nominal Drive	110mV RMS
Acoustic Load	10.0mm x 1.0mm tubing into IEC711
Port Location	12C
Back vent	NO

Frequency response curve

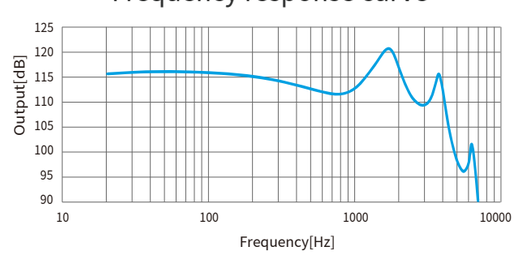

Single Balanced Armature Receivers (BRC)

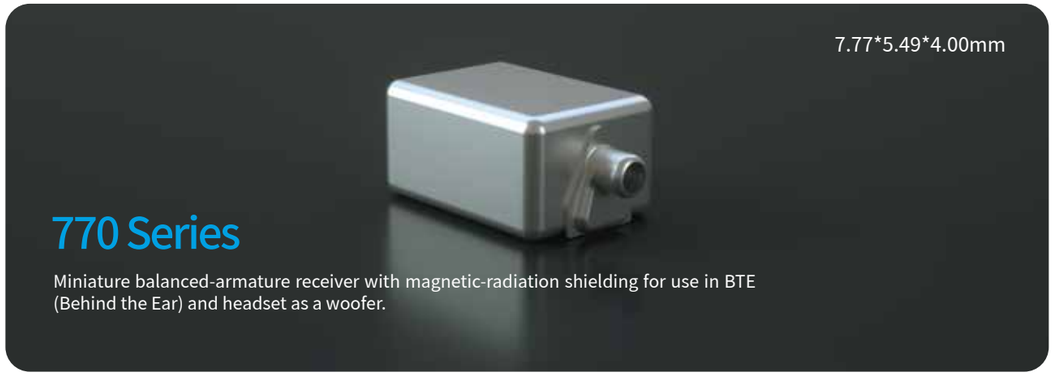

Dimensions (mm)

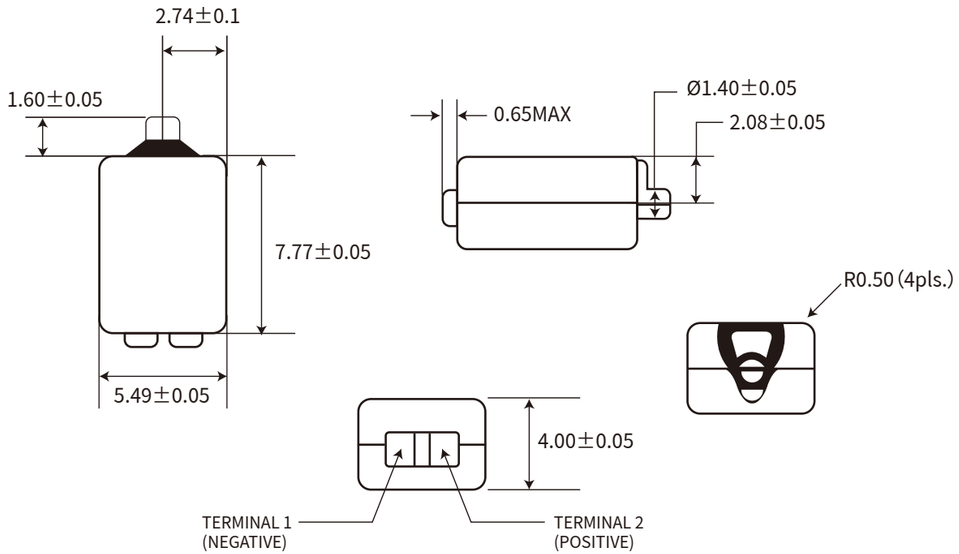

BRC770H70022

DCR	21.0Ω
Sensitivity	114.5dB@1000Hz
MPO @ peak	137.0dB
Nominal Drive	160mV RMS
Acoustic Load	10.0mm x 1.0mm tubing into IEC711
Port Location	12S
Back vent	NO

Frequency response curve

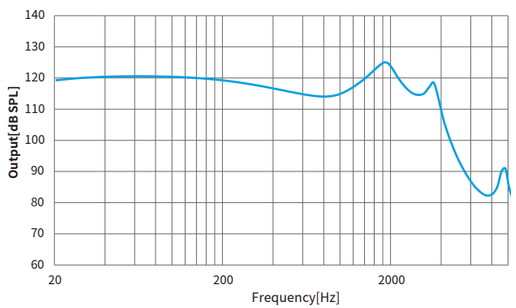

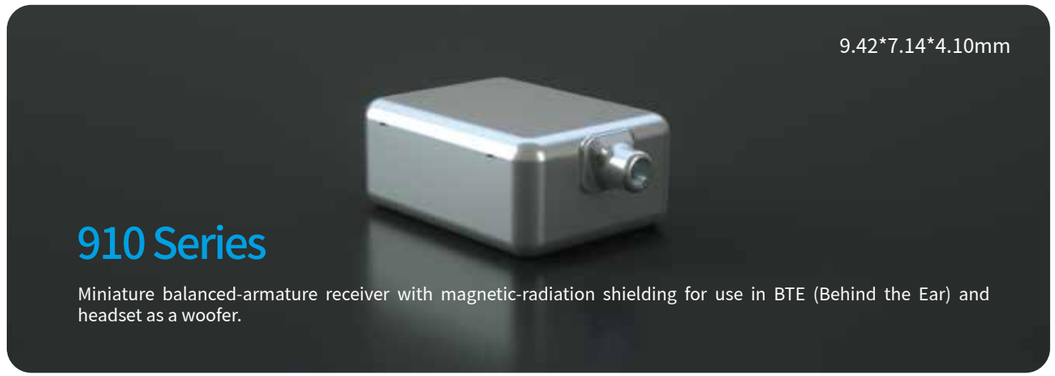

Dimensions (mm)

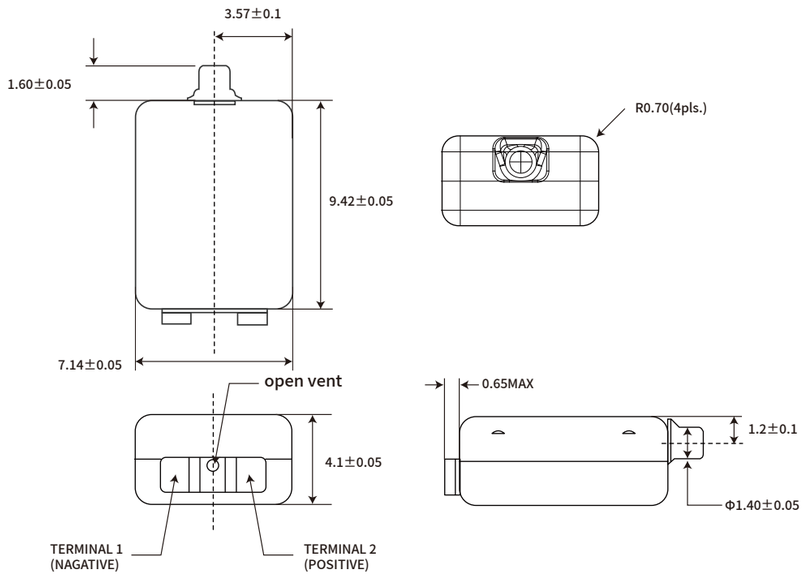

BRC910C90020

DCR	20.0Ω
Sensitivity	126.5dB@1000Hz
MPO @ peak	143.0dB
Nominal Drive	300mV RMS
Acoustic Load	10.0mm x 1.0mm tubing into IEC711
Port Location	12C
Back vent	NO

Frequency response curve

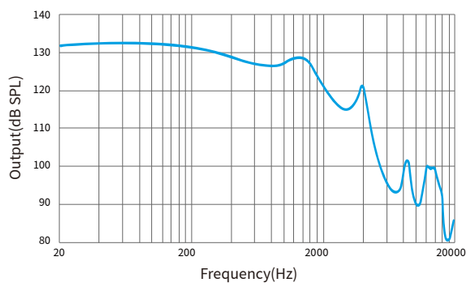

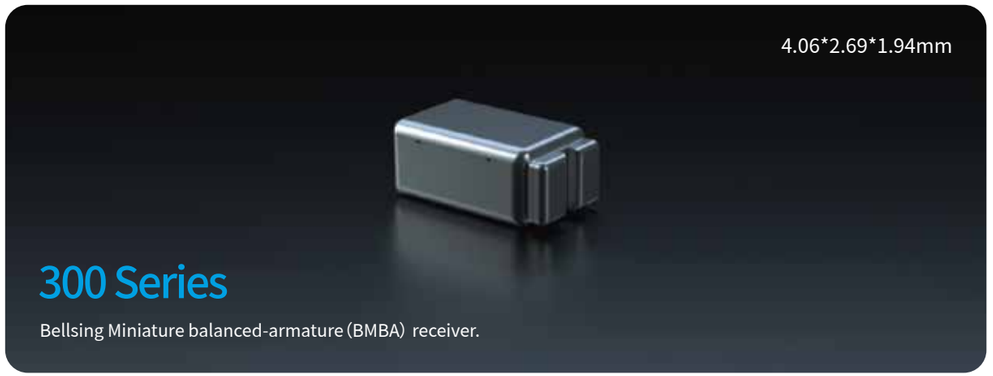

Dimensions

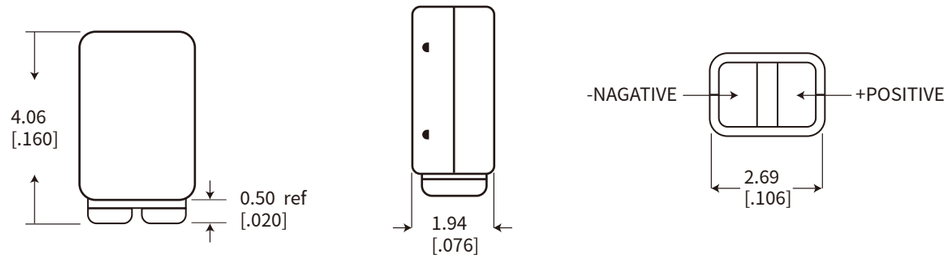

BTC300C90012 NEW

DCR	12.5Ω
Sensitivity	94.5dB@1000Hz
MPO @ peak	117.0dB
Nominal Drive	94mV RMS
Acoustic Load	10.0mm x 1.0mm tubing into IEC711
Port Location	12N
Back vent	NO

Frequency response curve

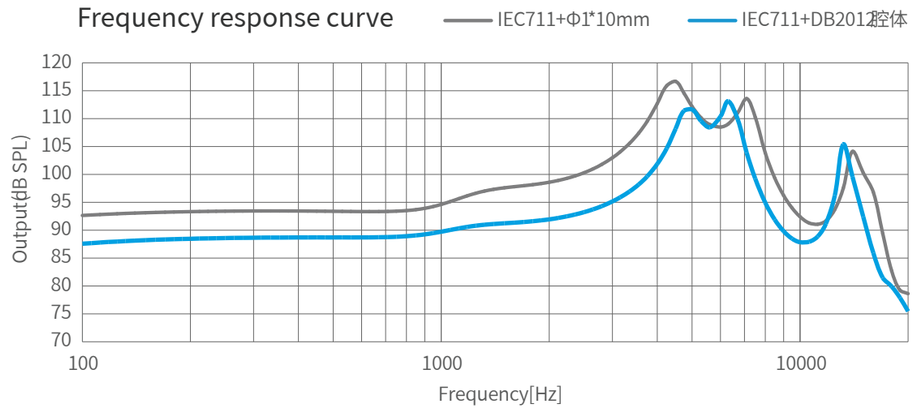

5.02*2.69*1.94mm

305 Series

Miniature balanced-armature receiver with stainless steel case for using in CIC (Complete In the Canal) and IIC (Invisible In the Canal) applications with standard response, can also be used in commercial hearing devices, headset applications.

Dimensions (mm)

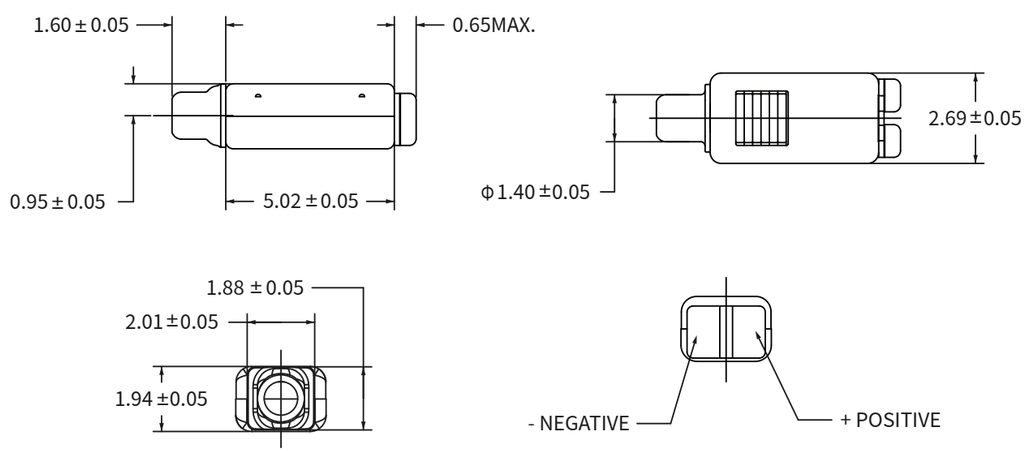

Single Automatable Balanced Armature Receiver (BTC)

BTC305C10012

DCR	12.5Ω
Sensitivity	94.5dB@1000Hz
MPO @ peak	125.0dB
Nominal Drive	94mV RMS
Acoustic Load	10.0mm x 1.0mm tubing into IEC711
Port Location	12S
Back vent	NO

Frequency response curve

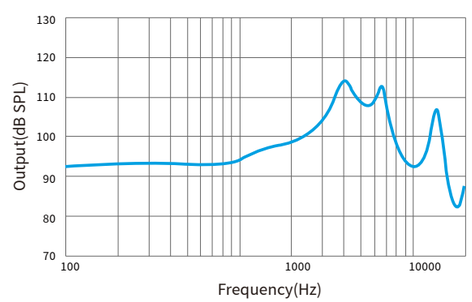

BTC305C90012

DCR	12.5Ω
Sensitivity	94.5dB@1000Hz
MPO @ peak	125.0dB
Nominal Drive	94mV RMS
Acoustic Load	10.0mm x 1.0mm tubing into IEC711
Port Location	12N
Back vent	NO

Frequency response curve

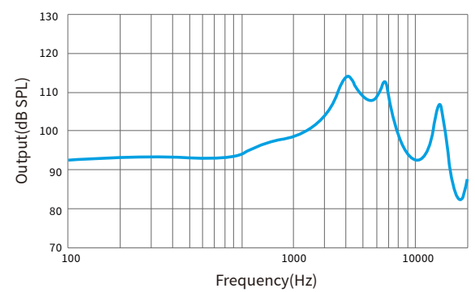

5.02*2.69*1.94mm

310 Series

Advanced Miniature balanced-armature (AMBA) receiver.

Dimensions (mm)

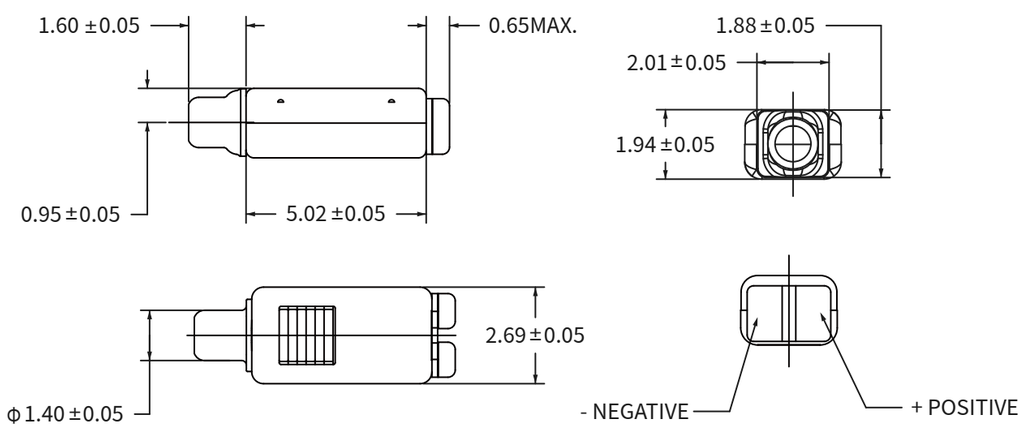

BTC310C10013

DCR	12.5Ω
Sensitivity	100.5dB@1000Hz
MPO @ peak	123.0dB
Nominal Drive	85mV RMS
Acoustic Load	10.0mm x 1.0mm tubing into IEC711
Port Location	12S
Back vent	NO

Frequency response curve

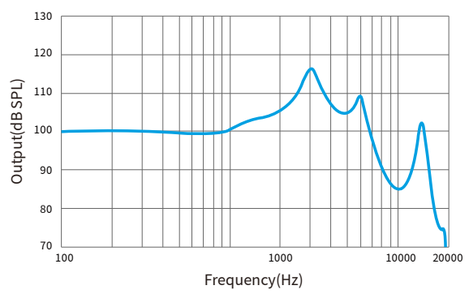

Single Automatable Balanced Armature Receiver (BTC)

5.15*2.96*2.58mm

350 Series

Bellsing Miniature balanced-armature (BMBA) receiver with magnetic-radiation shielding for use in ITE (In The Ear) , CIC (Complete In the Canal) and IIC (Invisible In the Canal) & In-ear Monitor applications with standard response. This transducer can also play an excellent role in commercial hearing products,TWS applications.

Dimensions (mm)

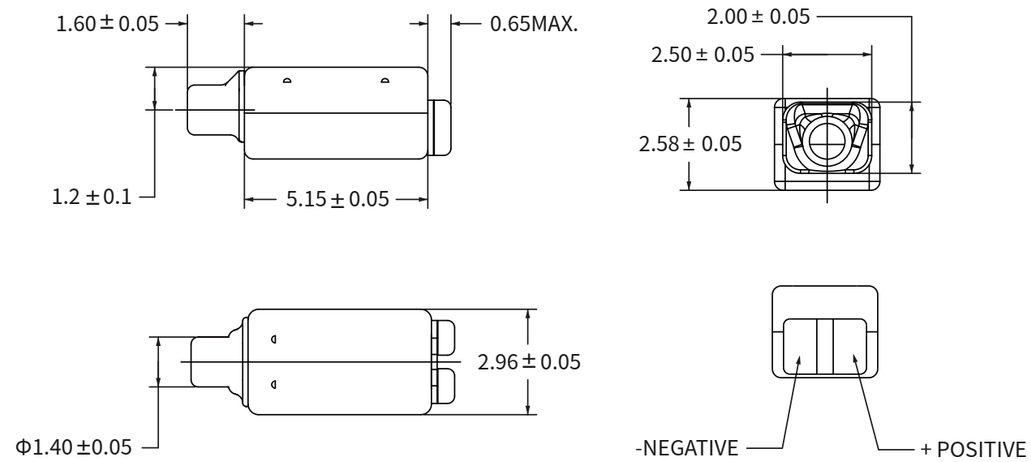

BTC350C10066

DCR	65.0Ω
Sensitivity	106.0dB@1000Hz
MPO @ peak	124.0dB
Nominal Drive	180mV RMS
Acoustic Load	10.0mm x 1.0mm tubing into IEC711
Port Location	12C
Back vent	NO

Frequency response curve

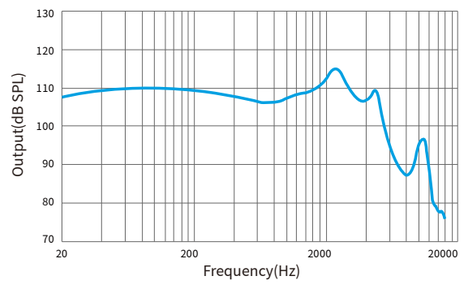

BTC350C11021

DCR	22.0Ω
Sensitivity	109.0dB@1000Hz
MPO @ peak	124.0dB
Nominal Drive	120mV RMS
Acoustic Load	10.0mm x 1.0mm tubing into IEC711
Port Location	12C
Back vent	NO

Frequency response curve

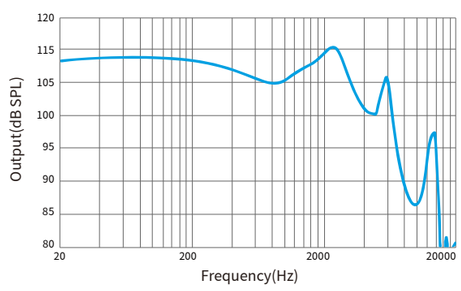

Single Automatable Balanced Armature Receiver (BTC)

6.26*4.27*2.99mm

540 Series

Miniature balanced-armature receiver with magnetic-radiation shielding for use in in-ear monitor and headset applications with standard response. This transducer can also play an excellent role in commercial hearing products.

Dimensions (mm)

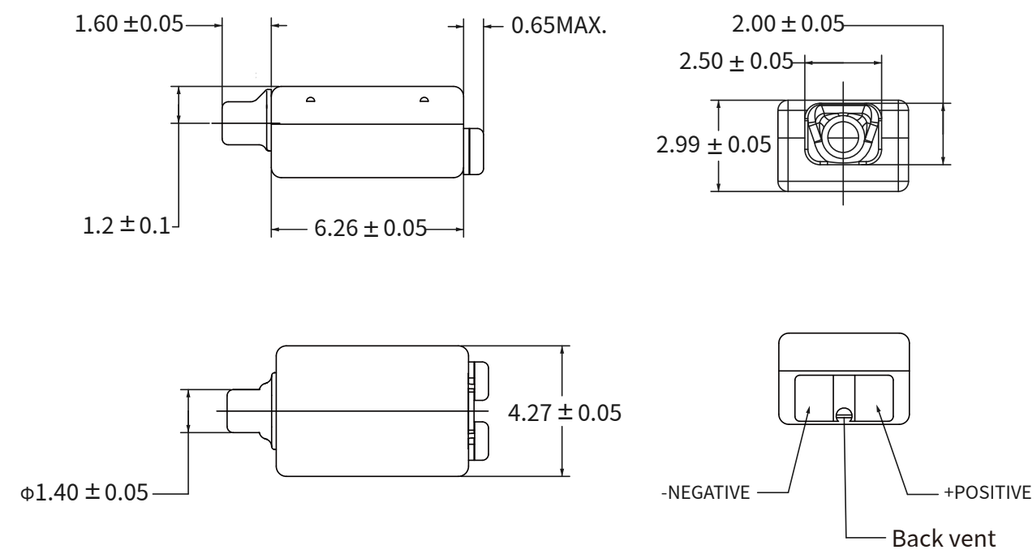

BTC540C11025

DCR	25.0Ω
Sensitivity	111.0dB@1000Hz
MPO @ peak	119.5dB
Nominal Drive	146mV RMS
Acoustic Load	10.0mm x 1.0mm tubing into IEC711
Port Location	12C
Back vent	YES

Frequency response curve

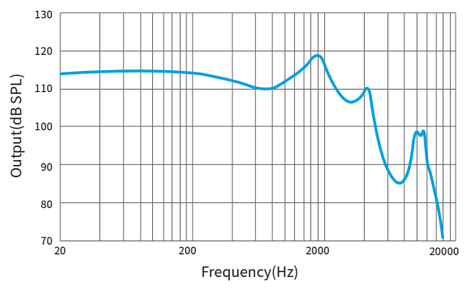

Dimensions (mm)

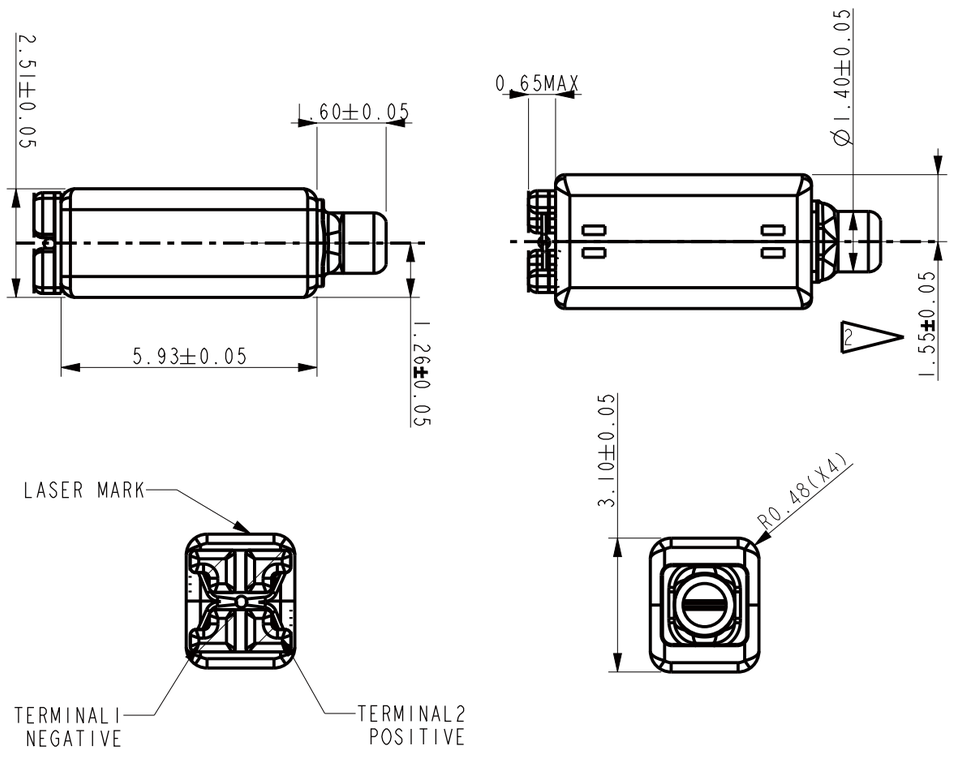

BRC200H90050

DCR	50.0Ω
Sensitivity	99.0dB@1000Hz
MPO @ peak	106.0dB
Nominal Drive	135mV RMS
Acoustic Load	10.0mm x 1.0mm tubing into 2CC
Port Location	12S
Back vent	NO

Frequency response curve

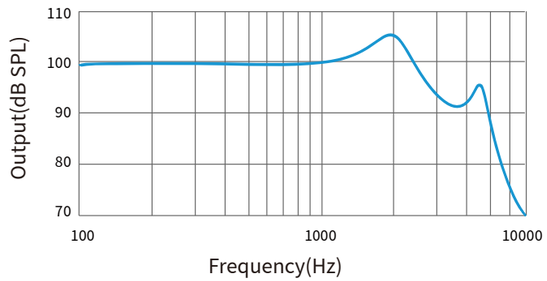

BRC200H90065

DCR	65.0Ω
Sensitivity	99.5dB@1000Hz
MPO @ peak	106.0dB
Nominal Drive	160mV RMS
Acoustic Load	10.0mm x 1.0mm tubing into 2CC
Port Location	12S
Back vent	NO

Frequency response curve

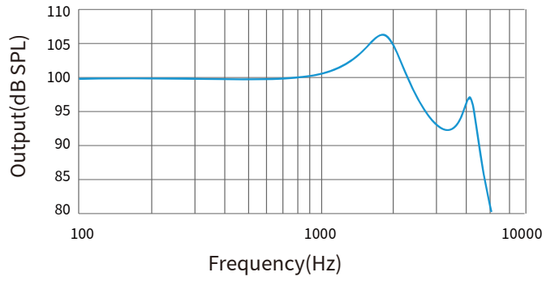

Dual Balanced Armature Receiver (BRC)

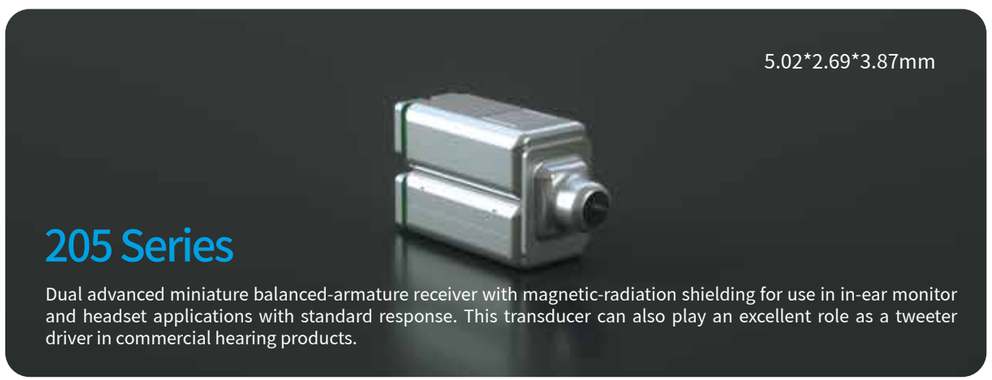

Dimensions (mm)

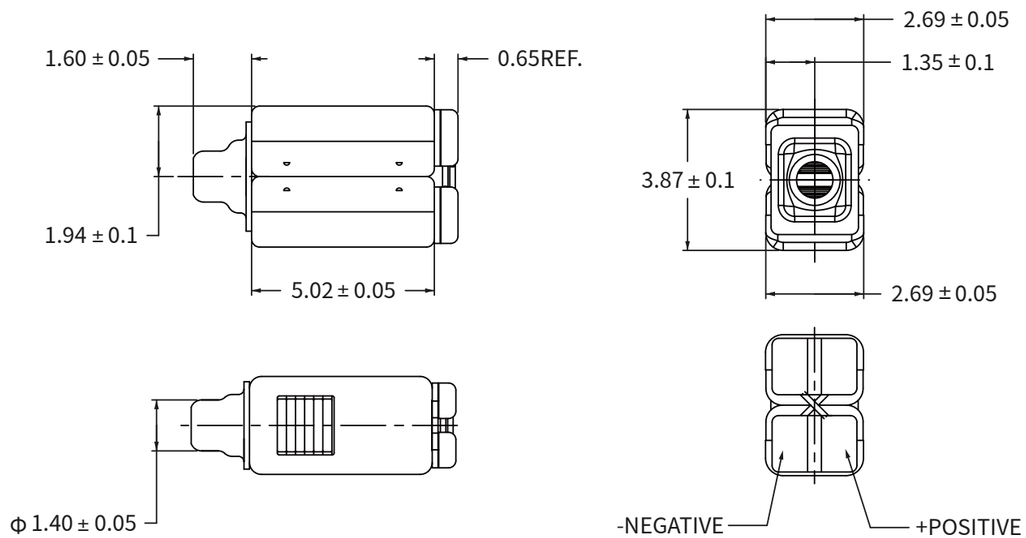

Dual Balanced Armature Receiver (BRC)

BRC205C90006

DCR	6.3Ω
Sensitivity	101.0dB@1000Hz
MPO @ peak	123.5dB
Nominal Drive	94mV RMS
Acoustic Load	10.0mm x 1.0mm tubing into IEC711
Port Location	12S
Back vent	NO

Frequency response curve

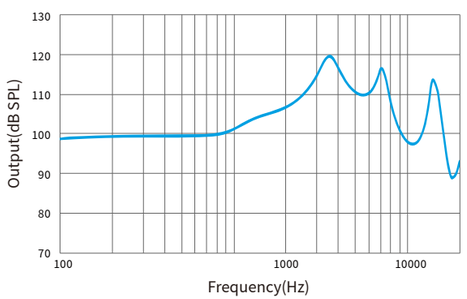

BRC205C91006

DCR	6.3Ω
Sensitivity	100.5dB@1000Hz
MPO @ peak	123.5dB
Nominal Drive	94mV RMS
Acoustic Load	10.0mm x 1.0mm tubing into IEC711
Port Location	12S
Back vent	NO

Frequency response curve

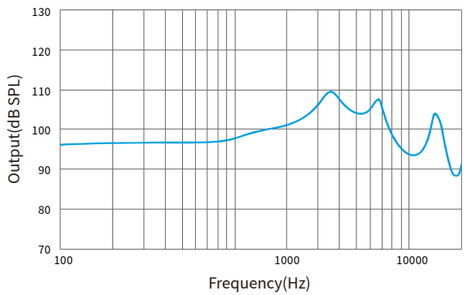

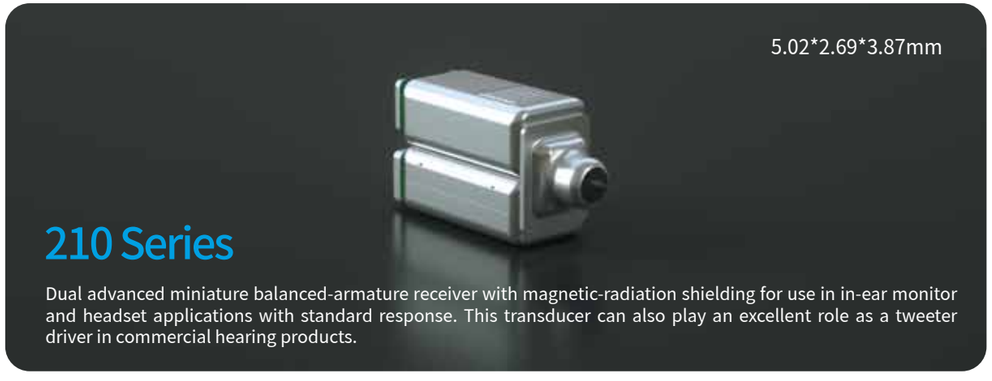

Dimensions (mm)

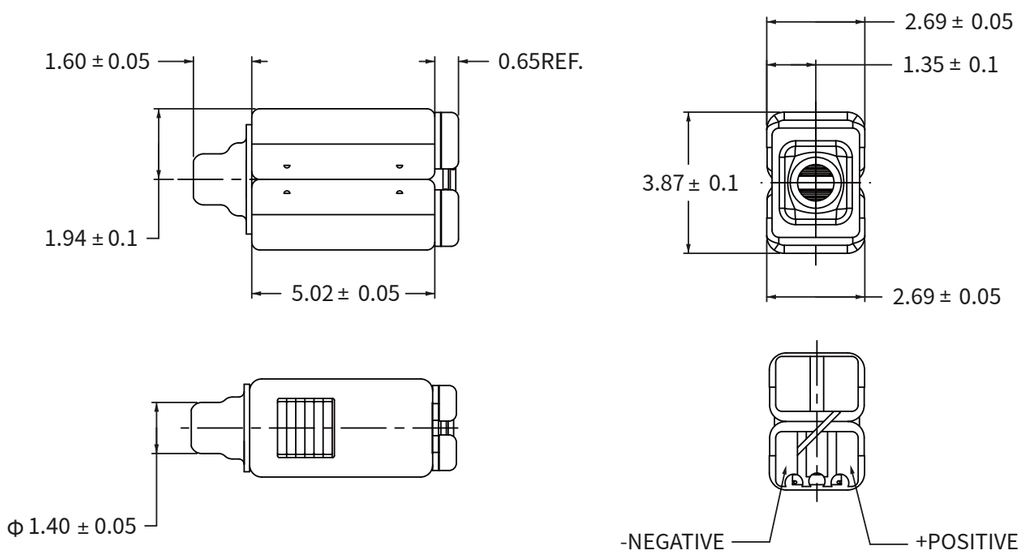

Dual Balanced Armature Receiver (BRC)

BRC210C90025

DCR	25.0Ω/12.5Ω
Sensitivity	105.5dB@1000Hz
MPO @ peak	123.5dB
Nominal Drive	85mV RMS
Acoustic Load	10.0mm x 1.0mm tubing into IEC711
Port Location	12S
Back vent	YES

Frequency response curve

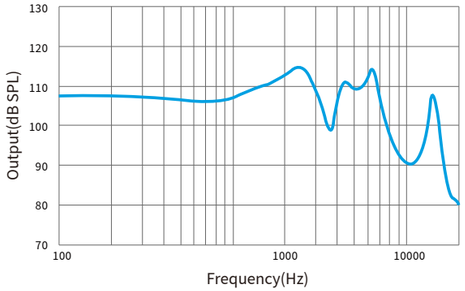

BRC210C90026

DCR	25.0Ω/12.5Ω
Sensitivity	104.0dB@1000Hz
MPO @ peak	123.5dB
Nominal Drive	85mV RMS
Acoustic Load	10.0mm x 1.0mm tubing into IEC711
Port Location	12S
Back vent	YES

Frequency response curve

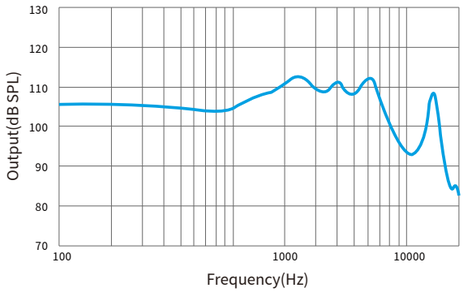

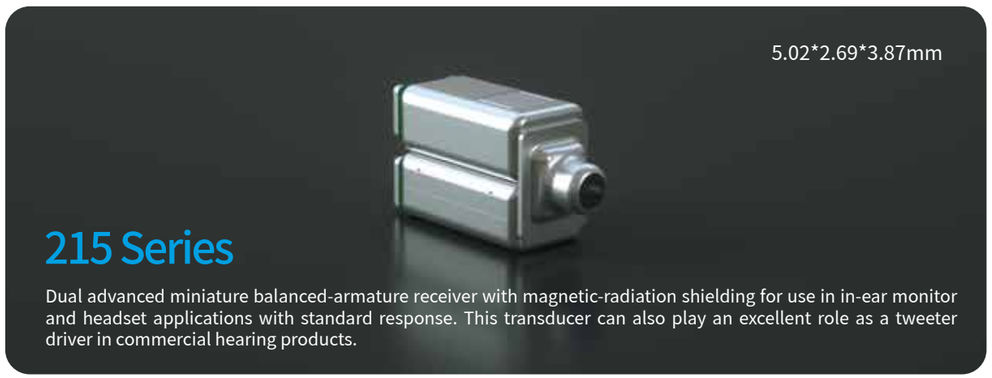

Dimensions (mm)

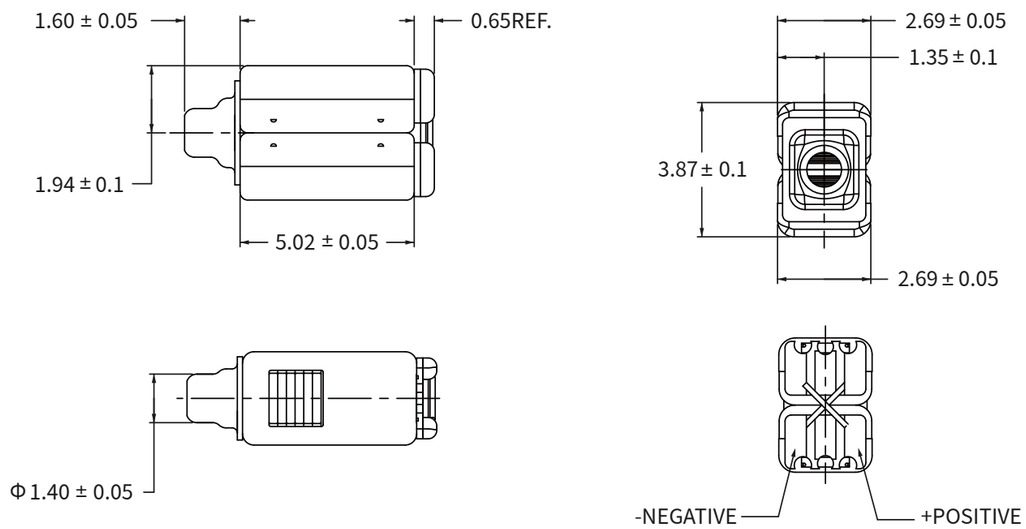

Dual Balanced Armature Receiver (BRC)

BRC215C90006

DCR	6.3Ω
Sensitivity	106.5dB@1000Hz
MPO @ peak	123.5dB
Nominal Drive	85mV RMS
Acoustic Load	10.0mm x 1.0mm tubing into IEC711
Port Location	12S
Back vent	NO

Frequency response curve

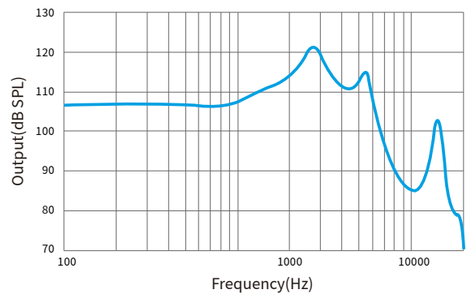

BRC215C90012

DCR	12.5Ω
Sensitivity	105.0dB@1000Hz
MPO @ peak	123.5dB
Nominal Drive	85mV RMS
Acoustic Load	10.0mm x 1.0mm tubing into IEC711
Port Location	12S
Back vent	NO

Frequency response curve

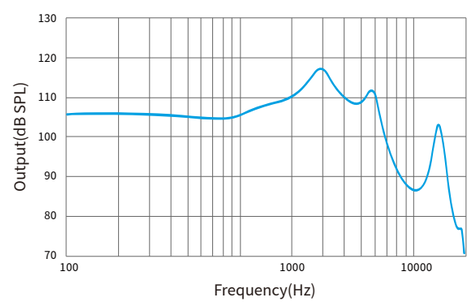

BRC215C90025

DCR	8.3Ω
Sensitivity	105.0dB@1000Hz
MPO @ peak	123.5dB
Nominal Drive	120mV RMS
Acoustic Load	10.0mm x 1.0mm tubing into IEC711
Port Location	12S
Back vent	NO

Frequency response curve

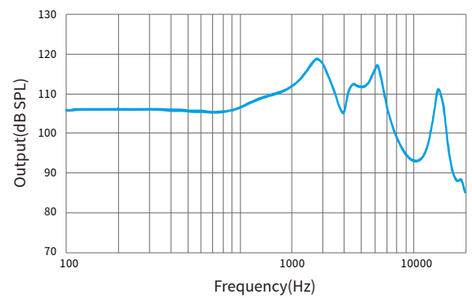

BRC215C90035

DCR	70.0Ω
Sensitivity	107.0dB@1000Hz
MPO @ peak	117.5dB
Nominal Drive	140mV RMS
Acoustic Load	10.0mm x 1.0mm tubing into IEC711
Port Location	12S
Back vent	NO

Frequency response curve

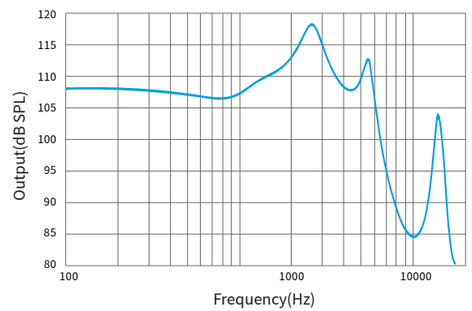

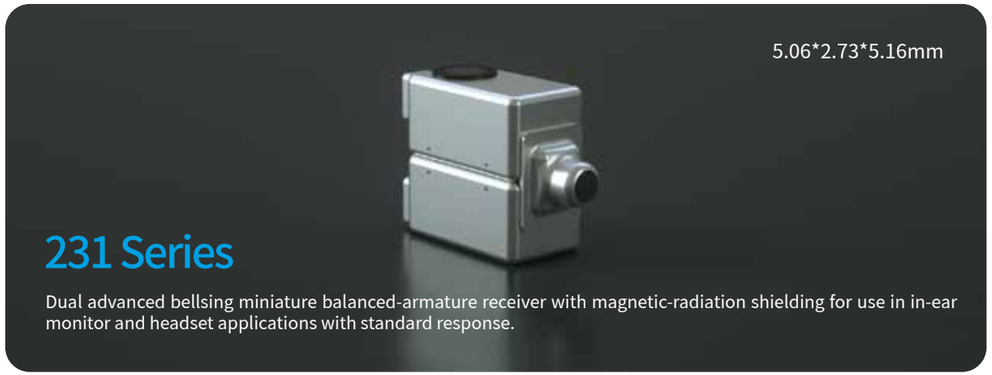

Dimensions (mm)

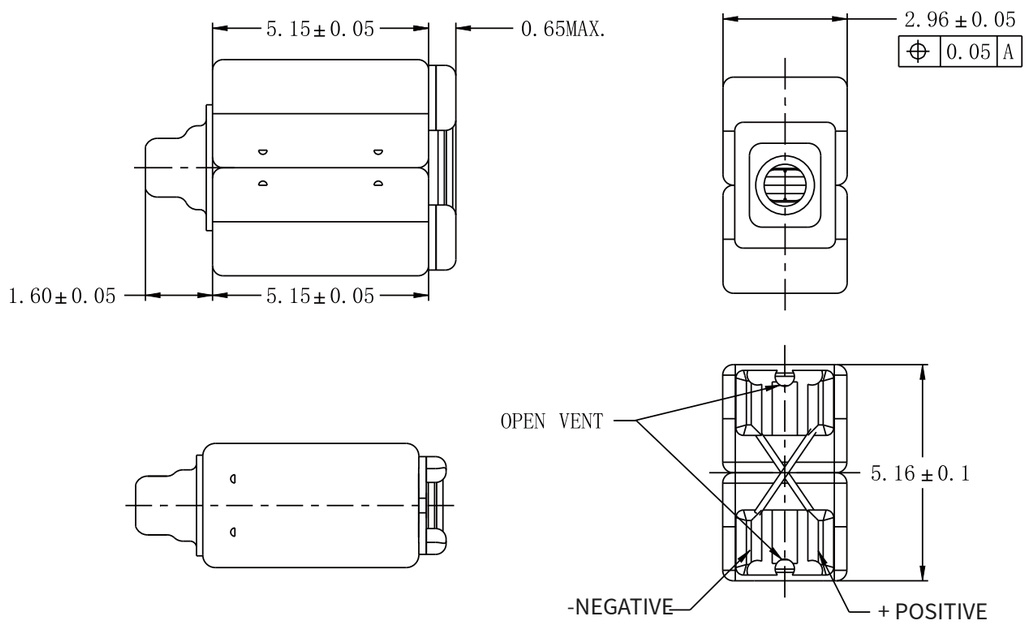

Dual Balanced Armature Receiver (BRC)

BRC231C80011

DCR	11.0Ω
Sensitivity	113.0dB@1000Hz
MPO @ peak	117.0dB
Nominal Drive	120mV RMS
Acoustic Load	10.0mm x 1.0mm tubing into IEC711
Port Location	12S
Back vent	NO

Frequency response curve

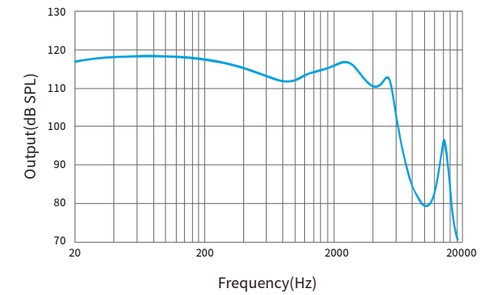

BRC231C90024

DCR	24.0Ω
Sensitivity	113.5dB@1000Hz
MPO @ peak	120.5dB
Nominal Drive	160mV RMS
Acoustic Load	10.0mm x 1.0mm tubing into IEC711
Port Location	12S
Back vent	NO

Frequency response curve

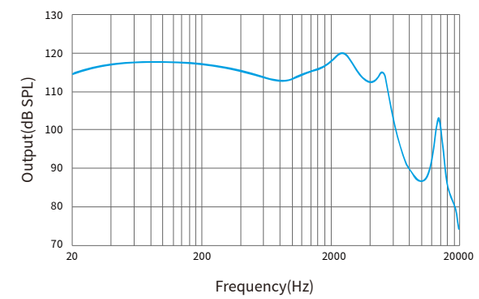

BRC231C91024

DCR	24.0Ω
Sensitivity	113.5dB@1000Hz
MPO @ peak	119.5dB
Nominal Drive	160mV RMS
Acoustic Load	10.0mm x 1.0mm tubing into IEC711
Port Location	12S
Back vent	YES

Frequency response curve

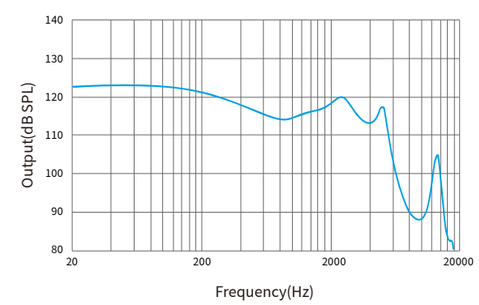

Dimensions (mm)

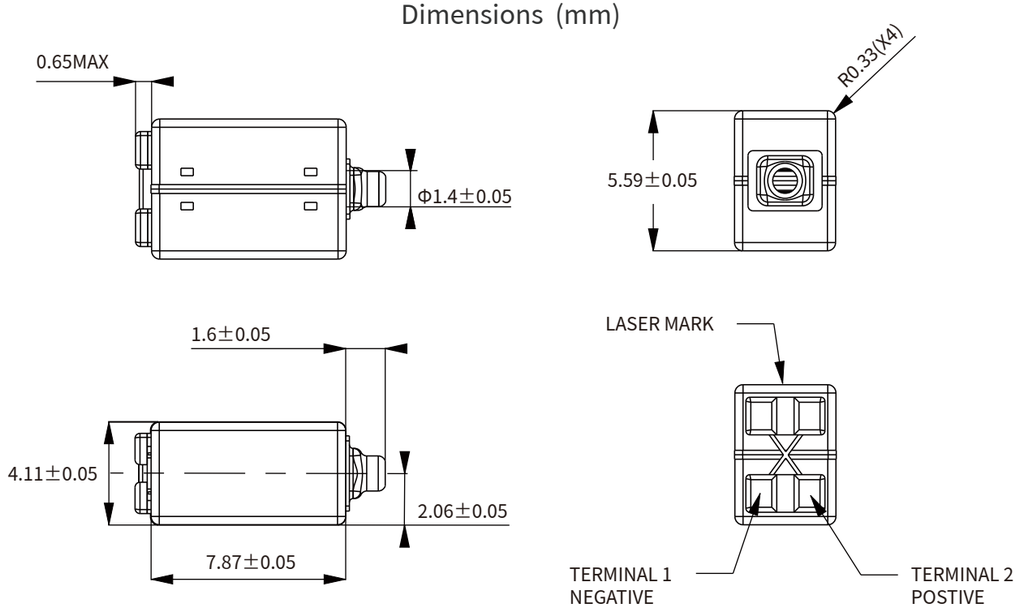

BRC630C90013

DCR	12.5Ω
Sensitivity	117.5dB@1000Hz
MPO @ peak	123.5dB
Nominal Drive	110mV RMS
Acoustic Load	10.0mm x 1.0mm tubing into IEC711
Port Location	12S
Back vent	NO

Frequency response curve

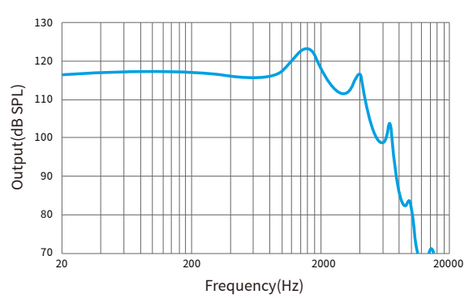

Dual Balanced Armature Receiver (BRC)

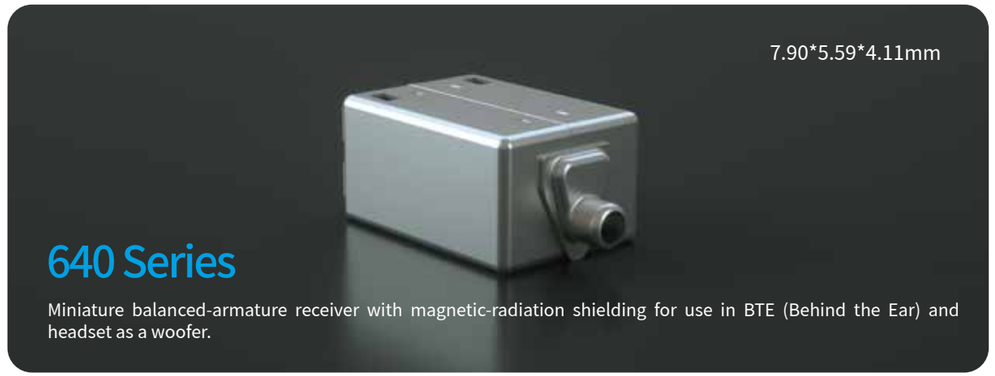

Dimensions (mm)

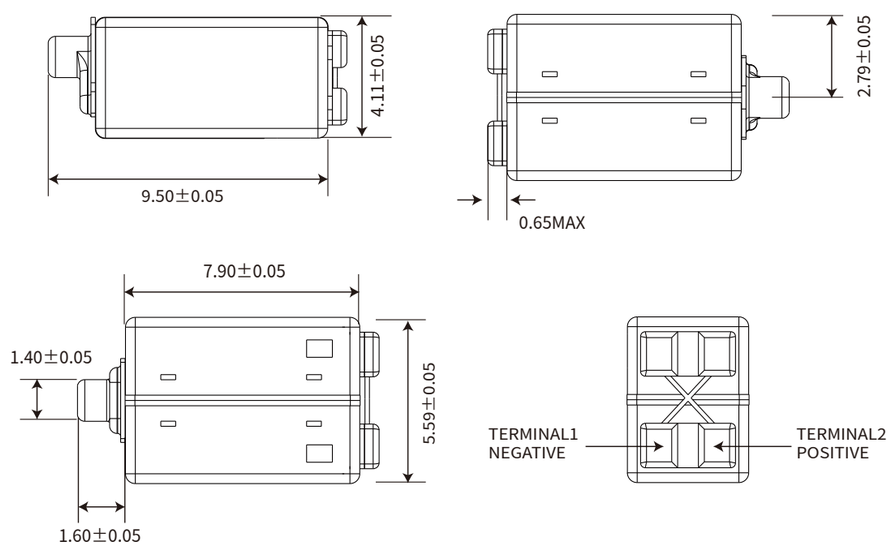

BRC640C91013

DCR	12.5Ω
Sensitivity	126.0dB@1000Hz
MPO @ peak	126.0dB
Nominal Drive	110mV RMS
Acoustic Load	10.0mm x 1.0mm tubing into IEC711
Port Location	12C
Back vent	YES

Frequency response curve

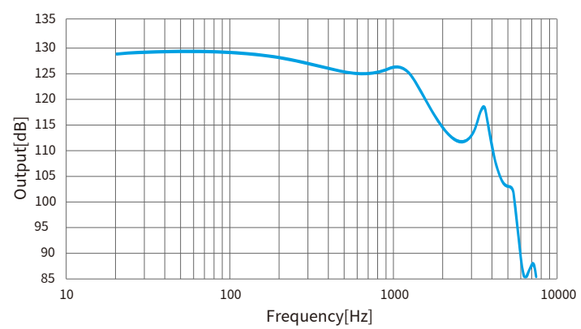

Dimensions (mm)

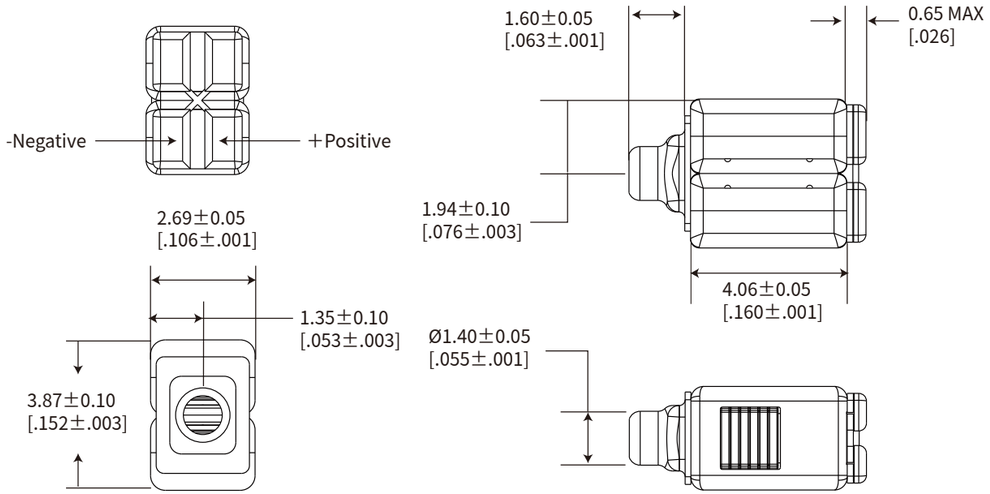

BTC202C10006 NEW

DCR	6.3Ω
Sensitivity	100dB@1000Hz
MPO @ peak	120.0dB
Nominal Drive	94mV RMS
Acoustic Load	10.0mm x 1.0mm tubing into IEC711
Port Location	12S
Back vent	NO

Frequency response curve

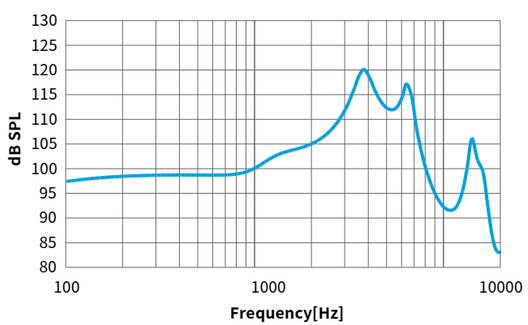

Dual Automatable Balanced Armature Receiver (BTC)

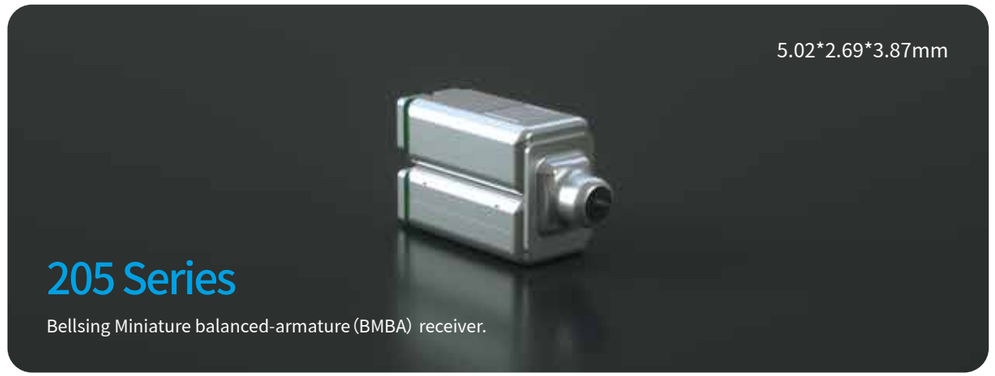

Dimensions (mm)

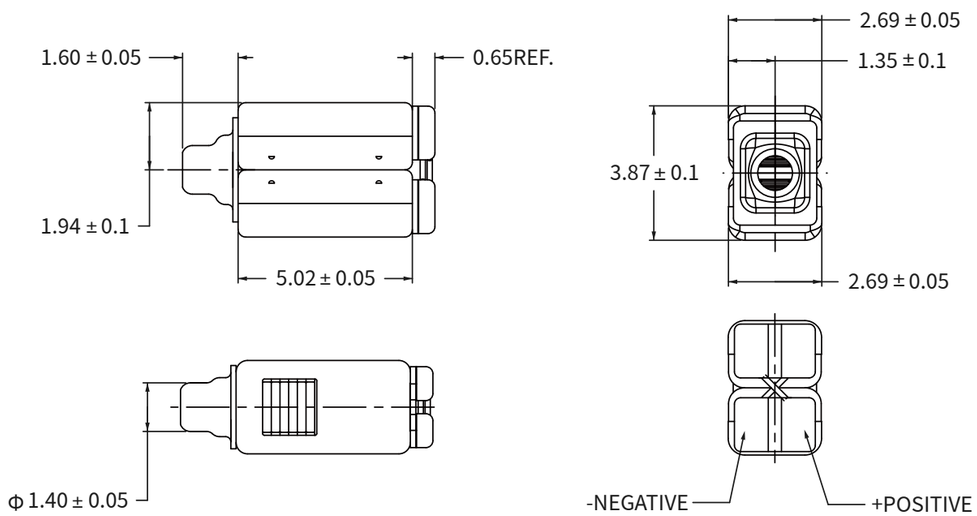

BTC205C10006

DCR	6.0Ω
Sensitivity	99.5dB@1000Hz
MPO @ peak	123.5dB
Nominal Drive	94mV RMS
Acoustic Load	10.0mm x 1.0mm tubing into IEC711
Port Location	12S
Back vent	NO

Frequency response curve

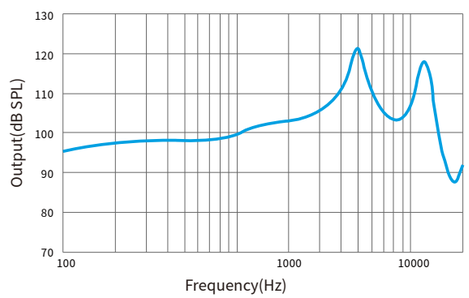

Dimensions (mm)

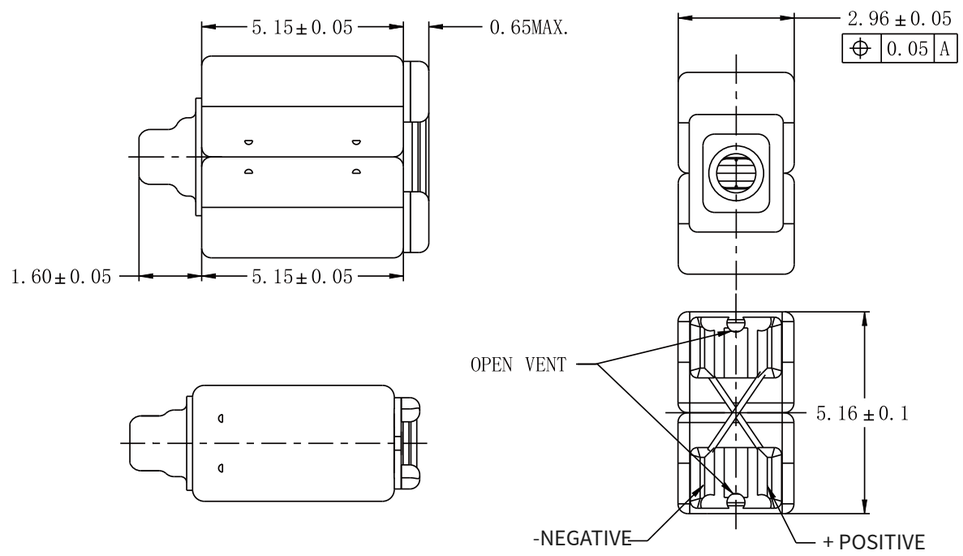

BTC231C11011

DCR	11.0Ω
Sensitivity	115dB@1000Hz
MPO @ peak	121.0dB
Nominal Drive	120mV RMS
Acoustic Load	10.0mm x 1.0mm tubing into IEC711
Port Location	12S
Back vent	YES

Frequency response curve

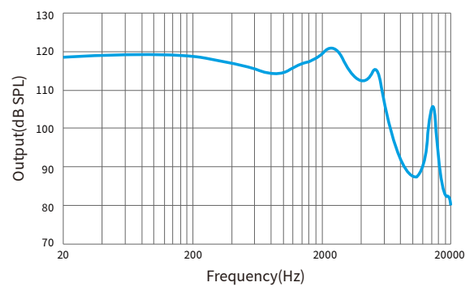

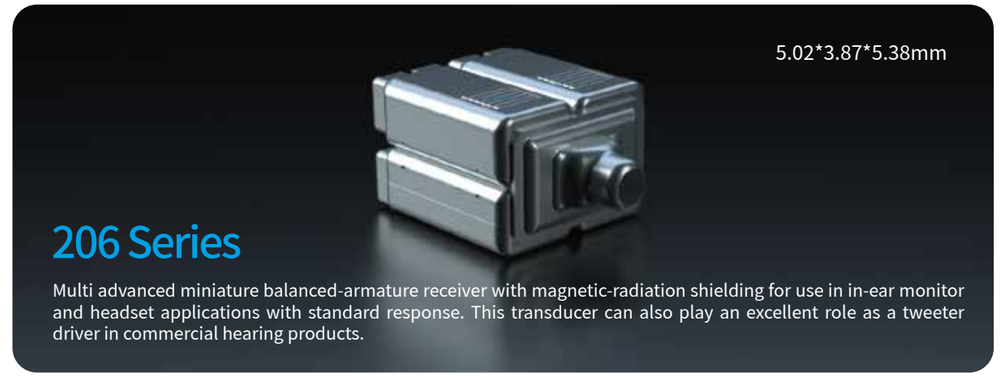

Dimensions

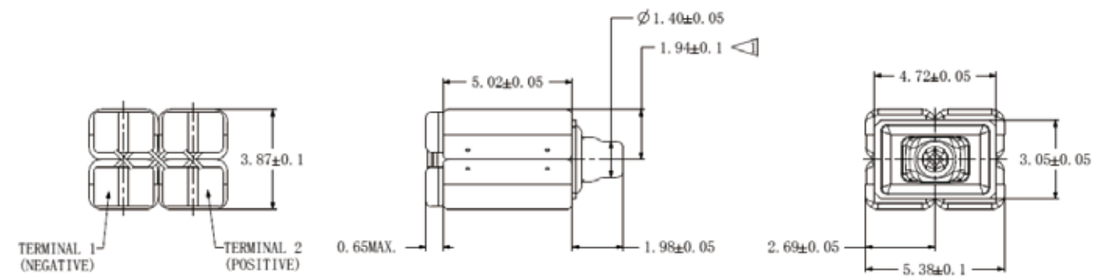

BRC206C70003

DCR	3.0Ω
Sensitivity	106dB@1000Hz
MPO @ peak	126.0dB
Nominal Drive	94mV RMS
Acoustic Load	tubeless fixture into IEC711
Port Location	2 tubes
Back vent	YES

Frequency response curve

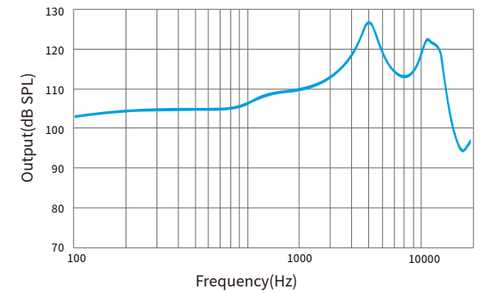

BRC206C90003

DCR	3.0Ω
Sensitivity	108dB@1000Hz
MPO @ peak	123.0dB
Nominal Drive	94mV RMS
Acoustic Load	10.0mm x 1.0mm tubing into IEC711
Port Location	12S
Back vent	NO

Frequency response curve

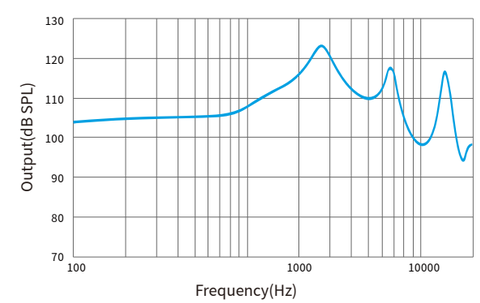

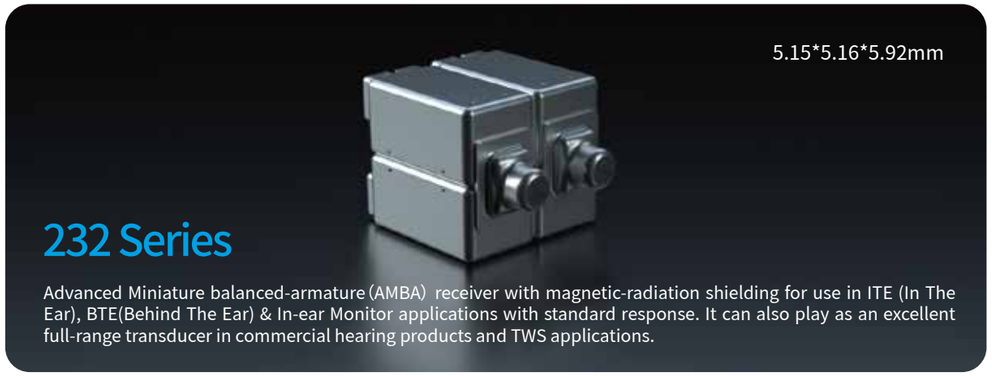

Dimensions (mm)

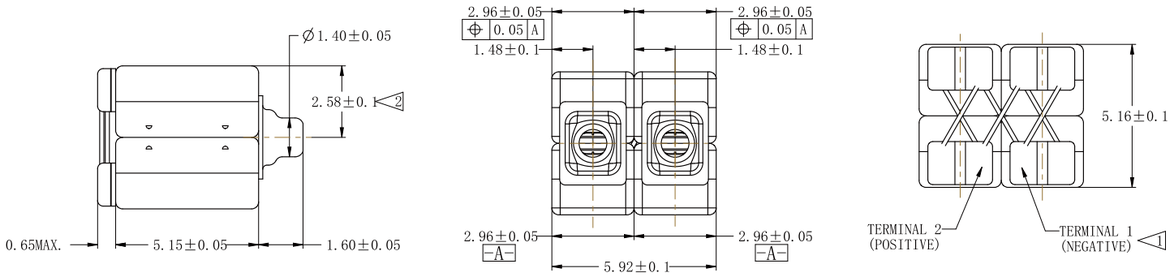

BRC232C90012

DCR	12.0Ω
Sensitivity	118.5dB@1000Hz
MPO @ peak	138dB
Nominal Drive	160mV RMS
Acoustic Load	10.0mm x 1.0mm tubing into IEC711
Port Location	12S
Back vent	NO

Frequency response curve

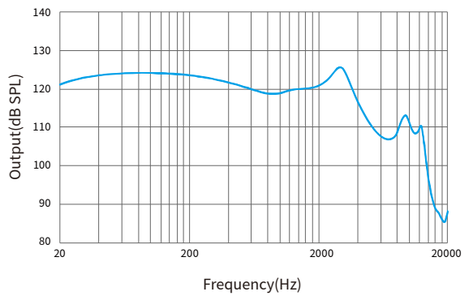

BRC232C99012

DCR	12.0Ω
Sensitivity	118.5dB@1000Hz
MPO @ peak	138dB
Nominal Drive	160mV RMS
Acoustic Load	10.0mm x 1.0mm tubing into IEC711
Port Location	12N
Back vent	NO

Frequency response curve

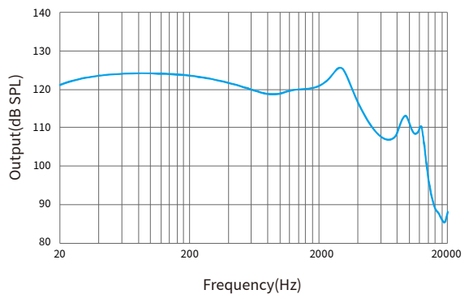

Dimensions (mm)

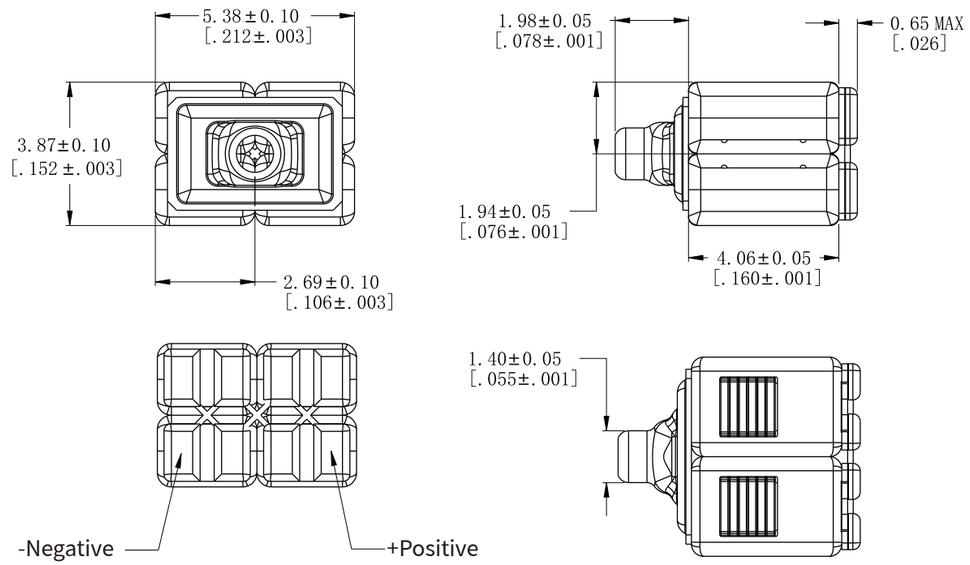

BTC204C10003 NEW

DCR	3.0Ω
Sensitivity	106dB@1000Hz
MPO @ peak	122.0dB
Nominal Drive	94mV RMS
Acoustic Load	10.0mm x 1.0mm tubing into IEC711
Port Location	12S
Back vent	NO

Frequency response curve

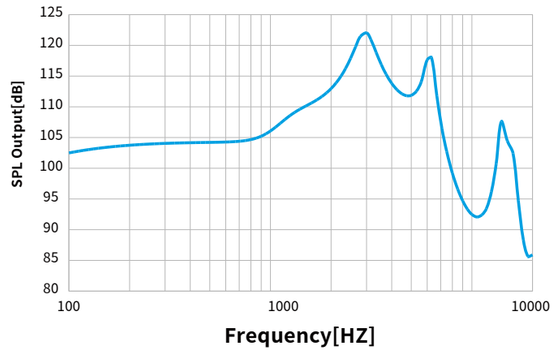

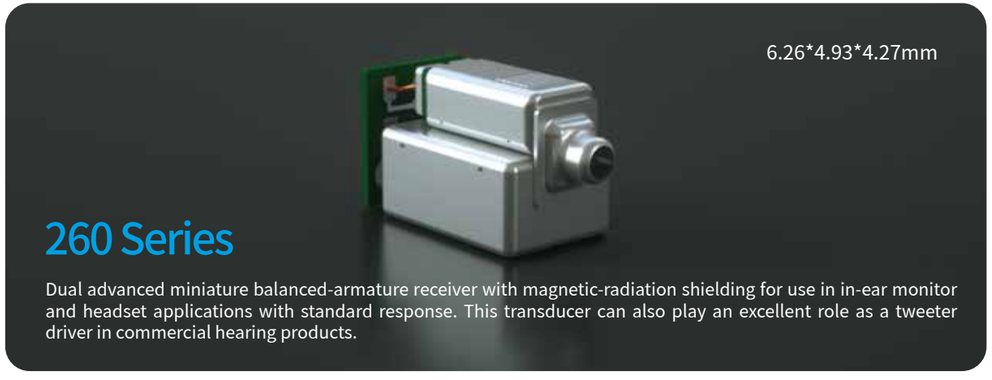

Dimensions (mm)

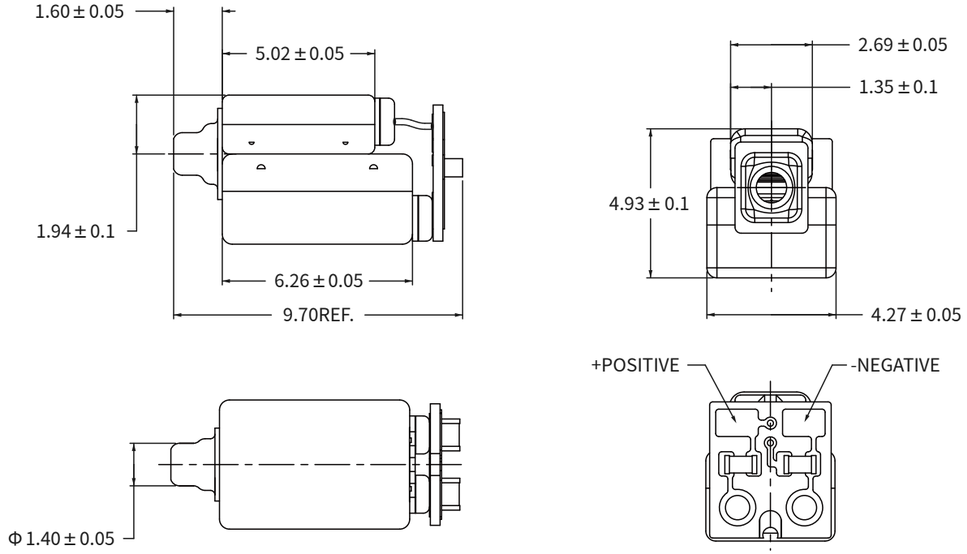

BRC260C90021

DCR	12.0Ω
Sensitivity	111.5dB@1000Hz
MPO @ peak	119.0dB
Nominal Drive	101mV RMS
Acoustic Load	10.0mm x 1.0mm tubing into IEC711
Port Location	12S
Back vent	YES

Frequency response curve

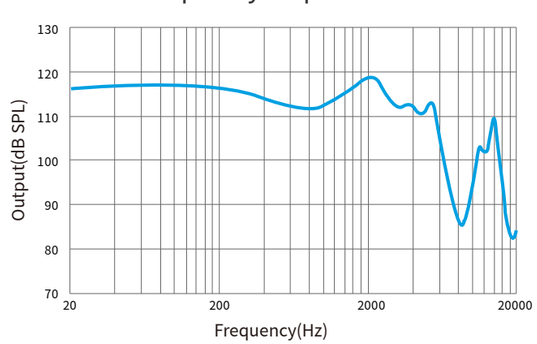

Multi-Driver Balanced Armature Receivers (BRC)

Dimensions (mm)

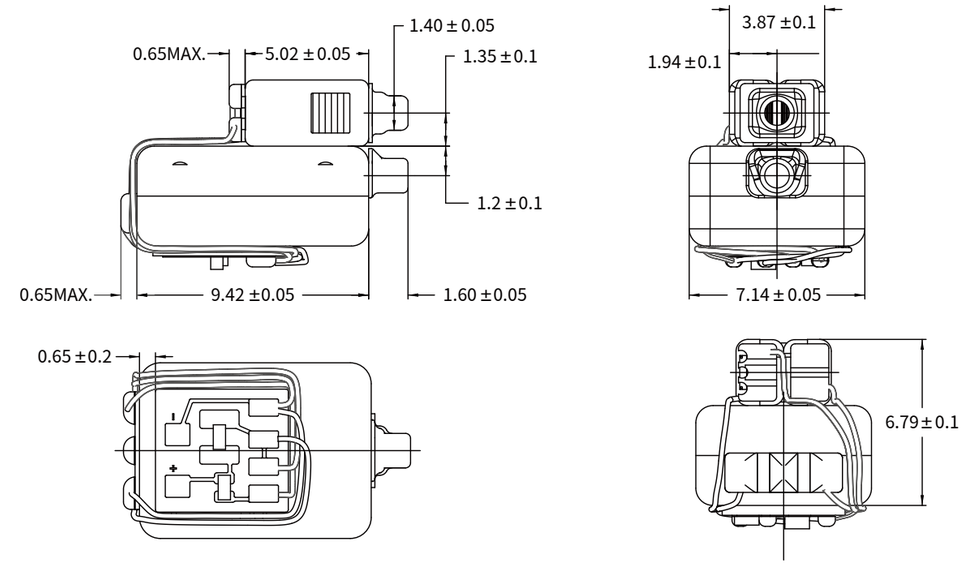

BRC280C90026

DCR	24.5Ω
Sensitivity	116.0dB@1000Hz
MPO @ peak	123.0dB
Nominal Drive	140mV RMS
Acoustic Load	Tubeless fixture into IEC711
Port Location	2 tubes
Back vent	NO on woofer

Frequency response curve

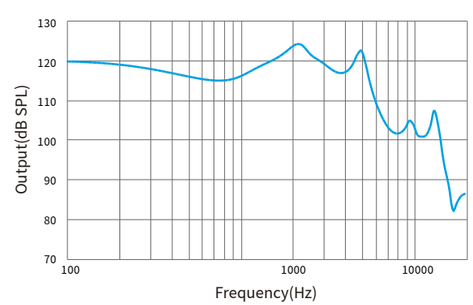

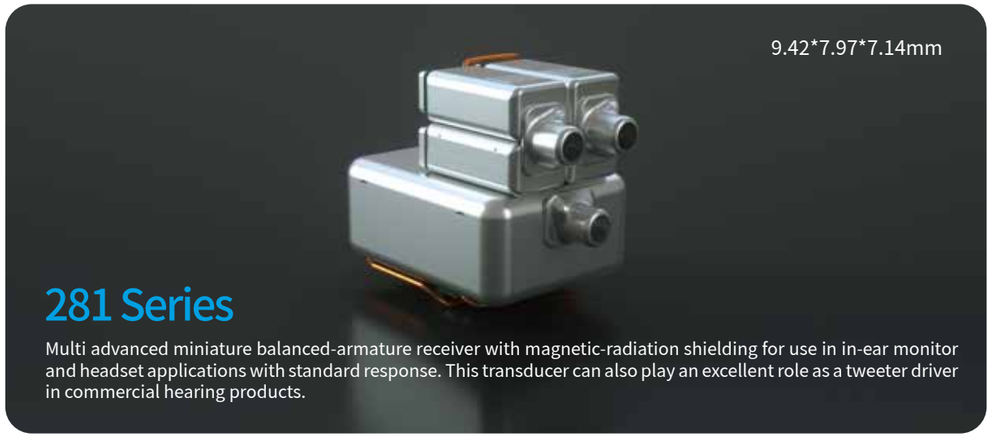

281 Series

Multi advanced miniature balanced-armature receiver with magnetic-radiation shielding for use in in-ear monitor and headset applications with standard response. This transducer can also play an excellent role as a tweeter driver in commercial hearing products.

Dimensions (mm)

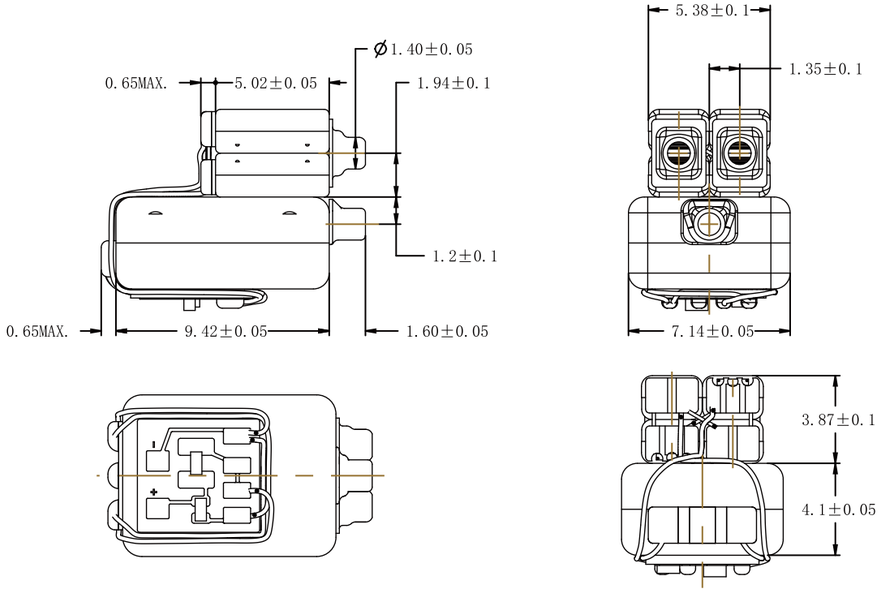

BRC281C90025

DCR	24.5Ω
Sensitivity	114.0dB@1000Hz
MPO @ peak	121.5dB
Nominal Drive	140mV RMS
Acoustic Load	Tubeless fixture into IEC711
Port Location	3 tubes
Back vent	NO on woofer

Frequency response curve

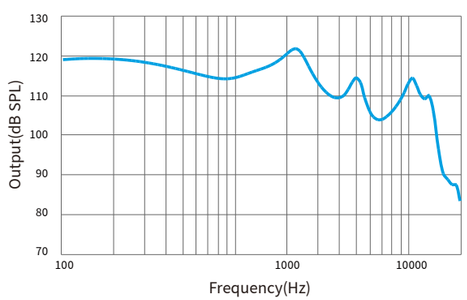

Multi-Driver Balanced Armature Receivers (BRC)

283 Series

Multi advanced miniature balanced-armature receiver for in-ear monitor and headset applications with full-band response. This transducer has balanced acoustic performance through low-frequency, mid-range frequency and high-frequency.

Dimensions (mm)

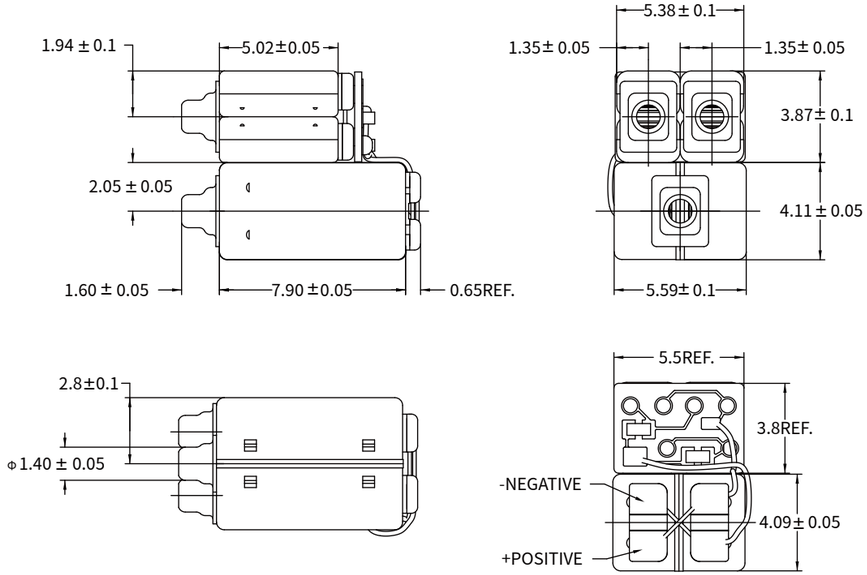

BRC283C90013

DCR	12.5Ω
Sensitivity	117.0dB@1000Hz
MPO @ peak	127.0dB
Nominal Drive	150mV RMS
Acoustic Load	Tubeless fixture into IEC711
Port Location	3 tubes
Back vent	NO

Frequency response curve

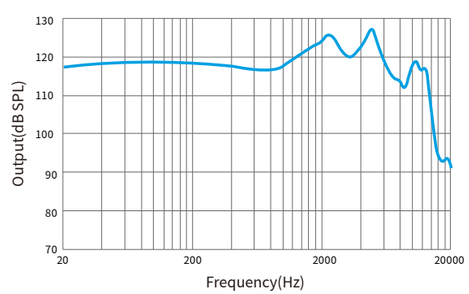

9.42*7.14*7.09mm

290 Series

Two-way balanced-armature receiver with magnetic-radiation shielding for use in in-ear monitor and headset applications. This transducer can play an excellent role as a full-range balanced receiver with improved bass performance.

Dimensions (mm)

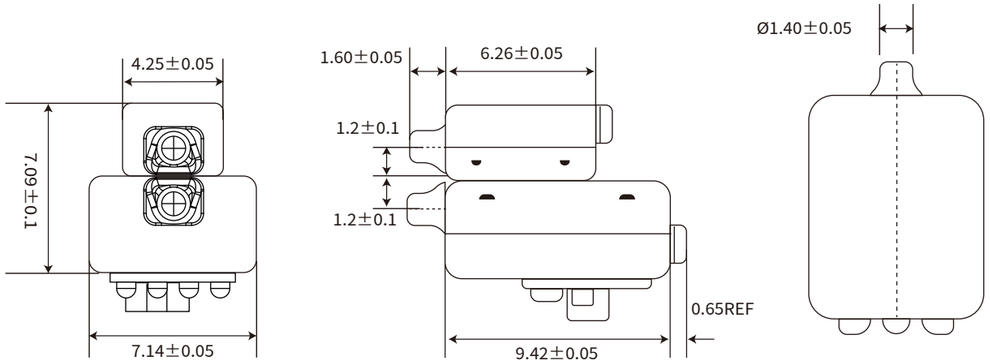

BRC290C90020 NEW

DCR	26.0Ω
Sensitivity	114.0dB@1000Hz
MPO @ peak	124.0dB
Nominal Drive	130mV RMS
Acoustic Load	10.0mm x 1.0mm tubing into IEC711
Port Location	2 tubes
Back vent	NO on woofer

Frequency response curve

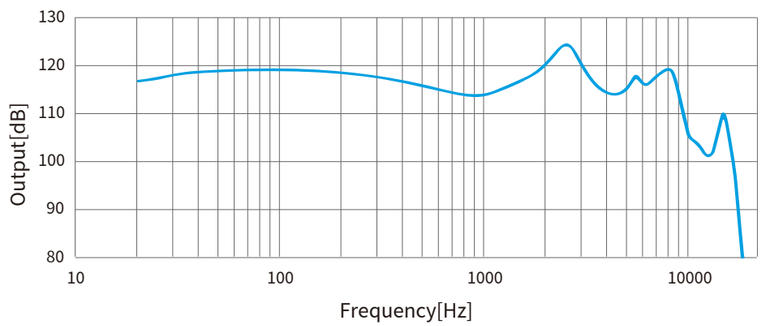

Planar Driver

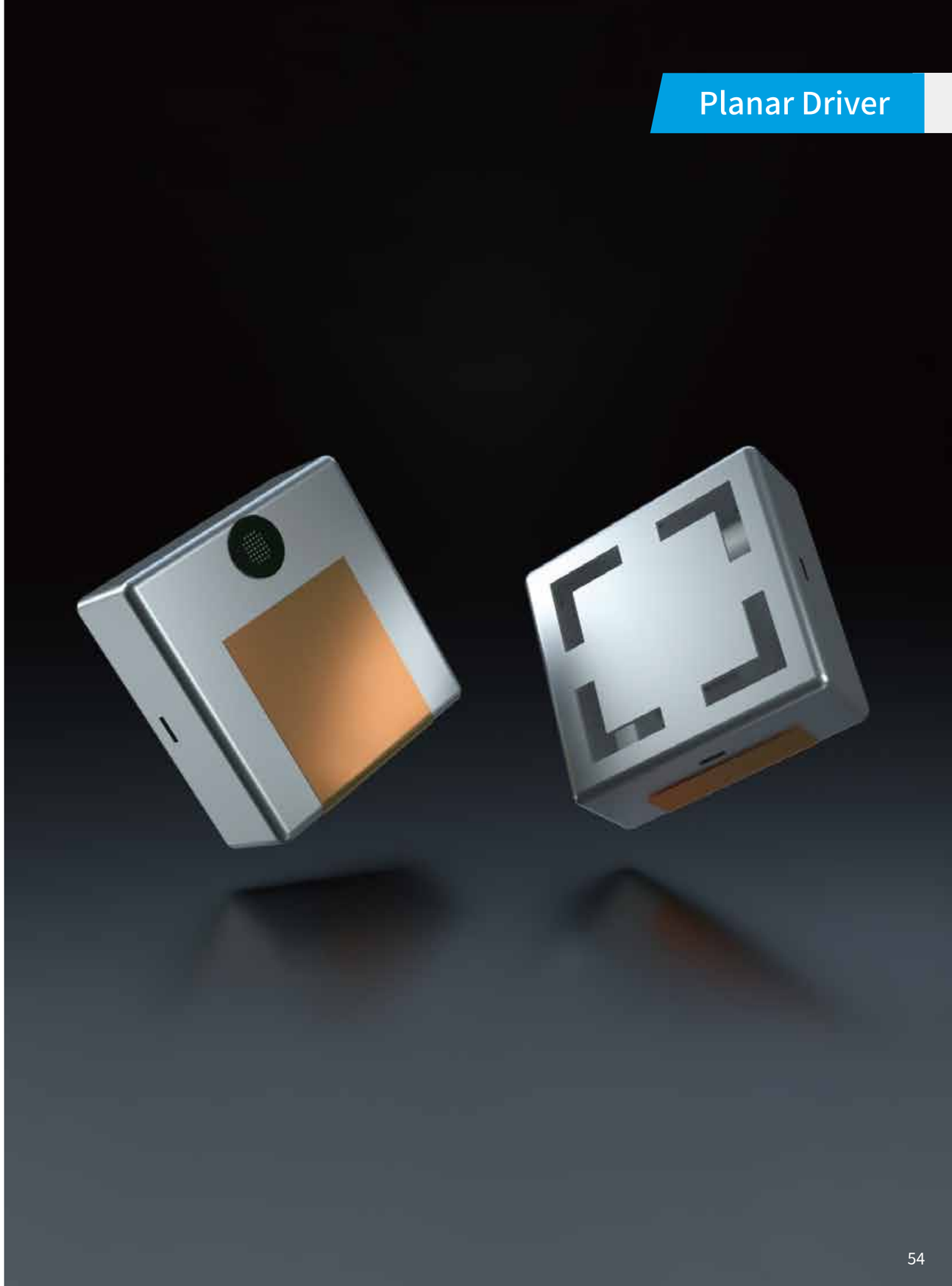

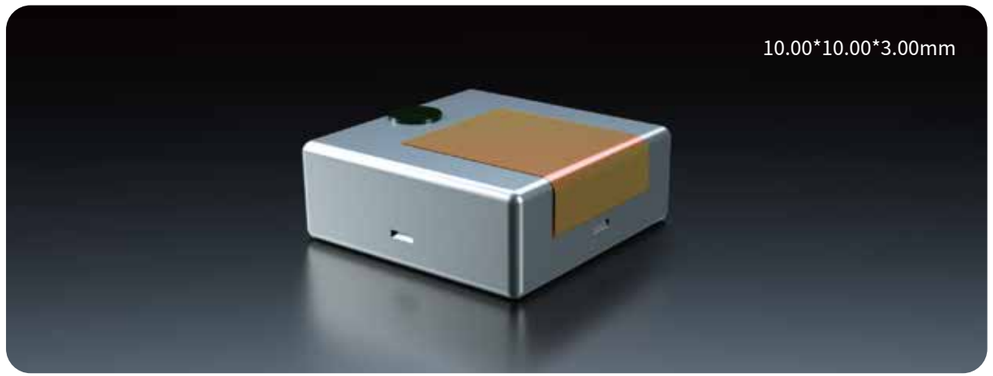

Dimensions (mm)

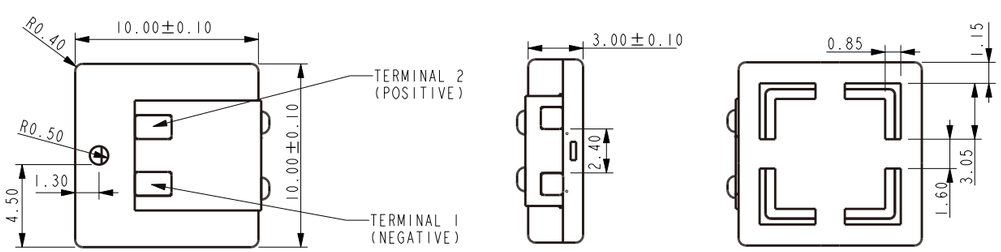

BPS1010FBA08 NEW

DCR	8.0Ω
Sensitivity	127.0dB@1000Hz
MPO @ peak	132.0dB
Nominal Drive	126mV RMS
Acoustic Load	10.0mm x 1.0mm tubing into IEC711

Nominal Frequency Response Curve

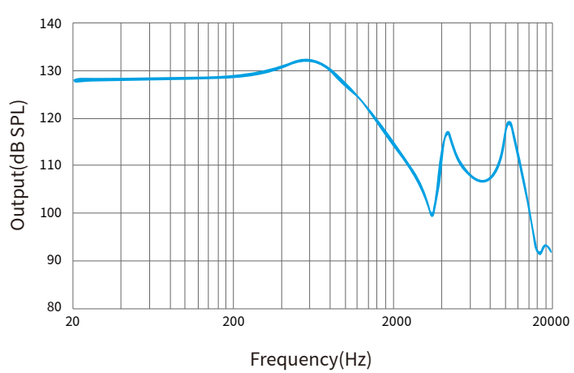

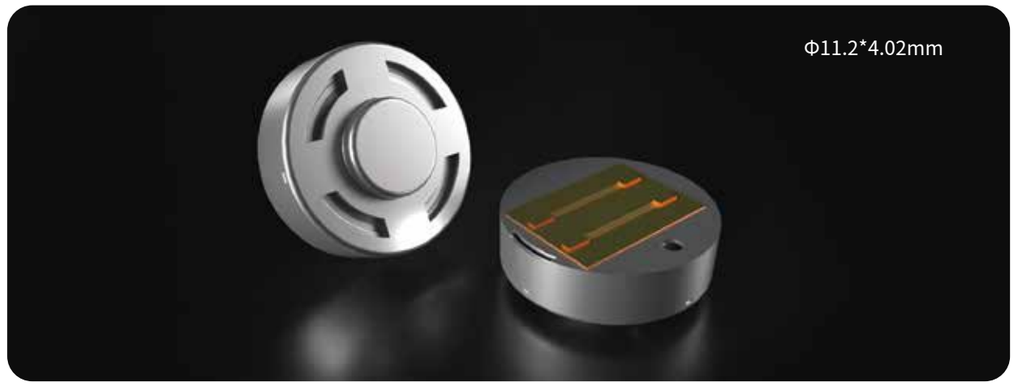

Dimensions (mm)

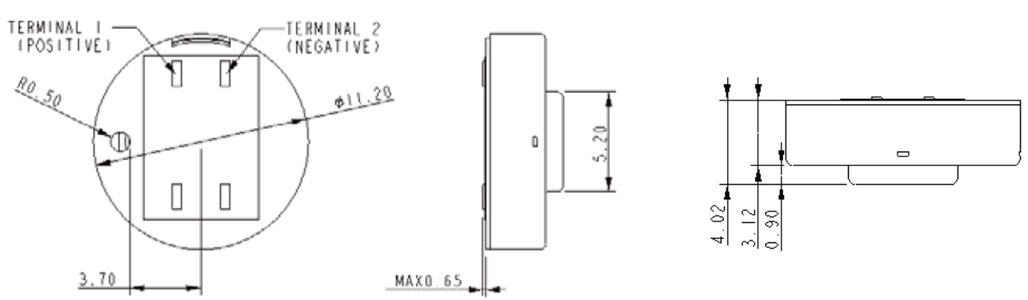

BPS112CAA08 NEW

DCR	8.0Ω
Sensitivity	129.0dB@1000Hz
MPO @ peak	132.0dB
Nominal Drive	126mV RMS
Acoustic Load	10.0mm x 1.0mm tubing into IEC711

Nominal Frequency Response Curve

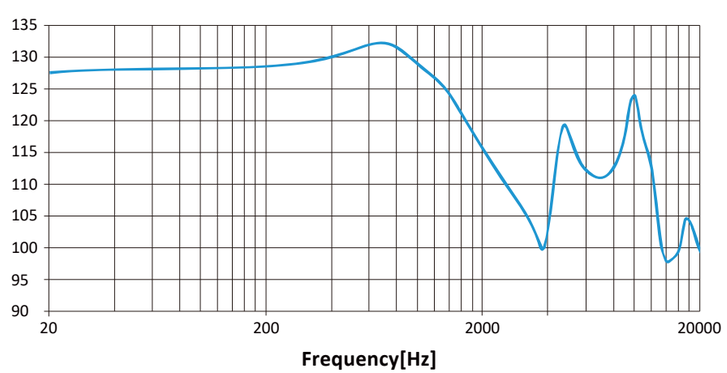

Dynamic Speakers

image	Name	Dimensions (mm)	Pages
	BSP060CAB16	Φ6.0mm*4.32mm	58
	BSP080CAB16	Φ8.0mm*4.33mm	59
	BSP100CAB32	Φ10.0mm*2.9mm	60
	BSP110UAB16	Φ11.0mm*3.59mm	61
	BSP120CAB32	Φ12mm*3.47mm	62
	BSP130CAD32	Φ13.0mm	63
	BSP160CAB20	Φ16.0mm	64

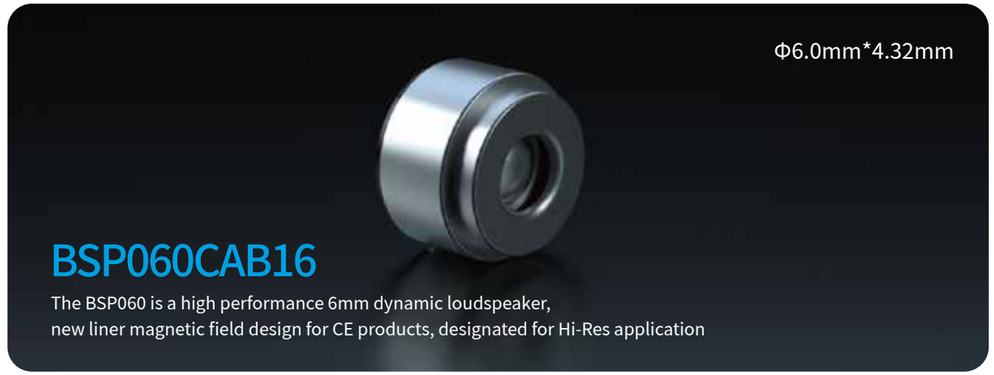

Dimensions：Φ6.0mm*4.32mm
Impedance：16Ω
Bandwidth：20~20000Hz
Rated power：5mW

Sensitivity：94dB @1000Hz
F0：400±80Hz
Nominal drive：126mV(1mW)
Coupler：IEC711

Dimensions (mm)

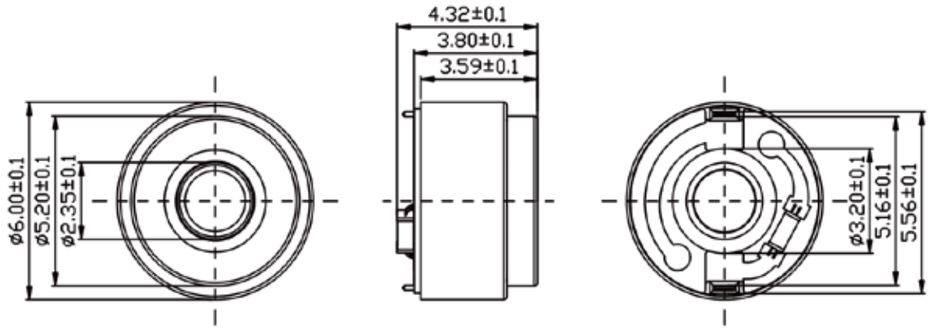

Frequency response curve

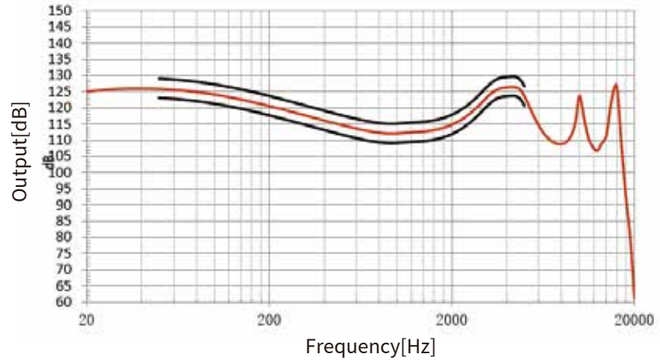

BSP080CAB16

The BSP080 is a high performance 8mm dynamic loudspeaker, repurposed for consumer electronics linear products.

Dimensions：Φ8.0mm*4.33mm
Impedance：16Ω
Bandwidth：20~20000Hz
Rated power：5mW

Sensitivity：100dB @1000Hz
F0：320±60Hz
Nominal drive：126mV(1mW)
Coupler：IEC711

Dimensions (mm)

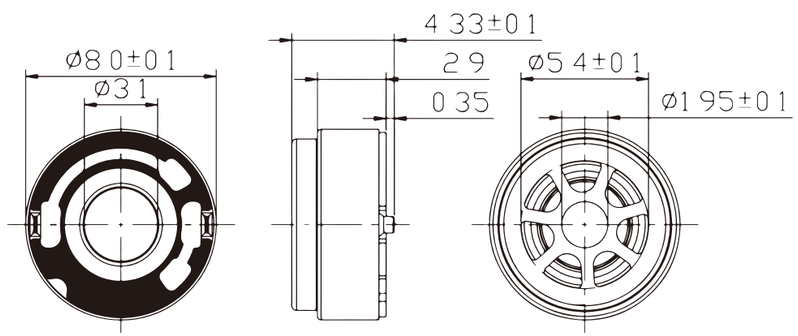

Frequency response curve

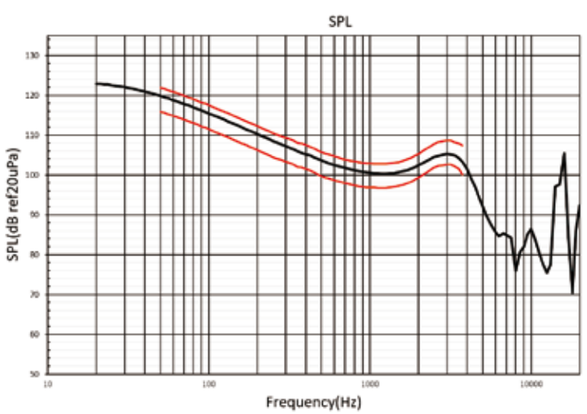

BSP100CAB32

The BSP100 is a high performance 10mm dynamic loudspeaker repurposed for consumer electronics linear products. It can meet the application requirements of high resolution.

Dimensions：Φ10.0mm*2.9mm
Impedance：32Ω
Bandwidth：20~20000Hz
Rated power：5mW

Sensitivity：109.1dB @1000Hz
F0：490±50Hz
Nominal drive：179mV(1mW)
Coupler：IEC711

Dimensions (mm)

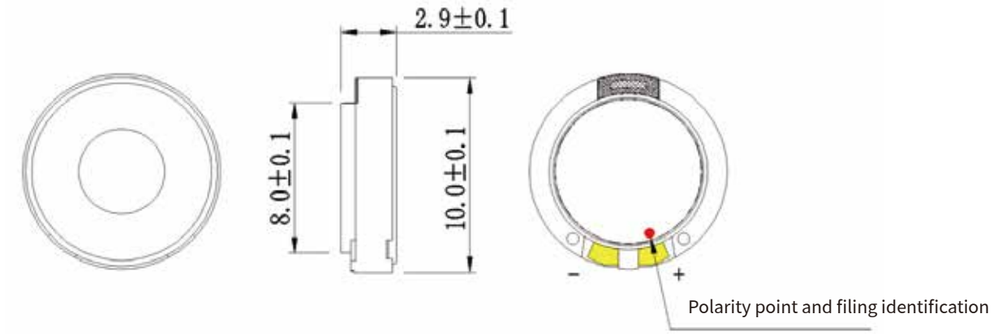

Frequency response curve

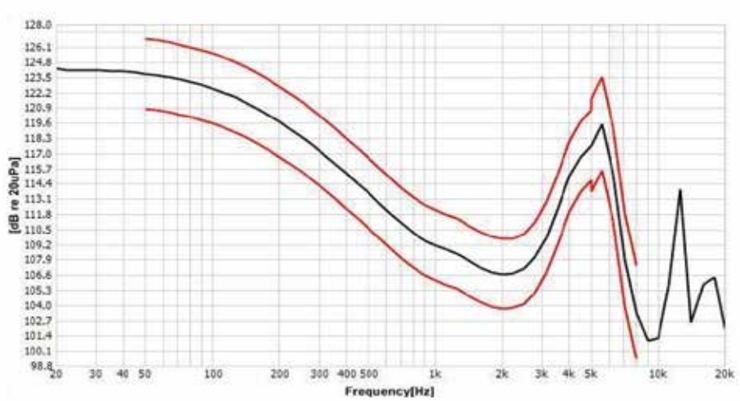

Φ11.0mm*3.59mm

BSP110UAB16

BSP110 is a high performance 11mm dynamic speaker with stronger bass through Ultra Xmax technology. Repurposed for consumer electronics linear products, especially active noise cancellation applications.

Dimensions：Φ10.8mm*3.59mm
Impedance：16Ω
Bandwidth：20~20000Hz
Rated power：5mW

Sensitivity：110dB @1000Hz
F0：390±30Hz
Nominal drive：126mV(1mW)
Coupler：IEC711

Dimensions (mm)

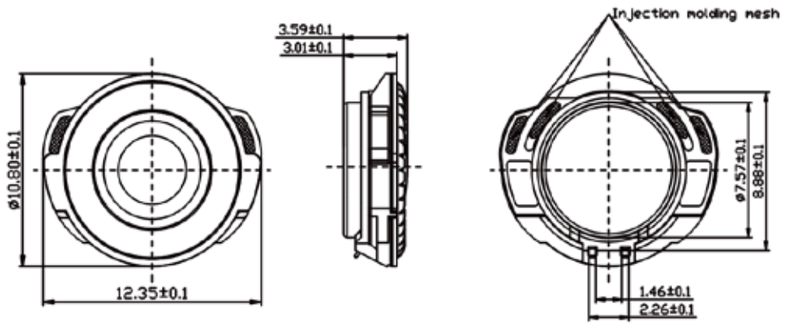

Frequency response curve

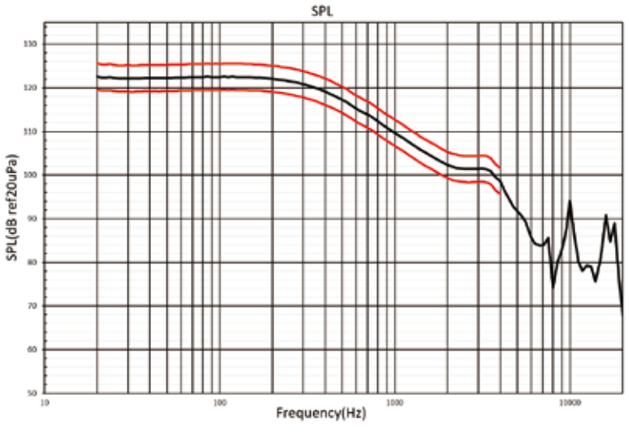

Φ12mm*3.47mm

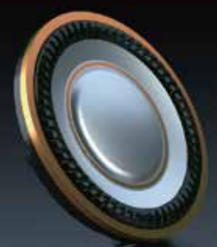

BSP120CAB32

BSP120 is a high performance 12mm dynamic loudspeaker repurposed for consumer electronics linear products

Dimensions：Φ11.65mm*3.47mm
Impedance：32Ω
Bandwidth：20~20000Hz
Rated power：3mW

Sensitivity：105dB @1000Hz
F0：260±50Hz
Nominal drive：179mV(1mW)
Coupler：IEC711

Dimensions (mm)

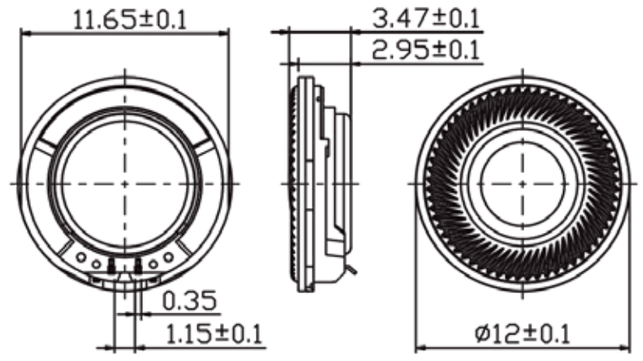

Frequency response curve

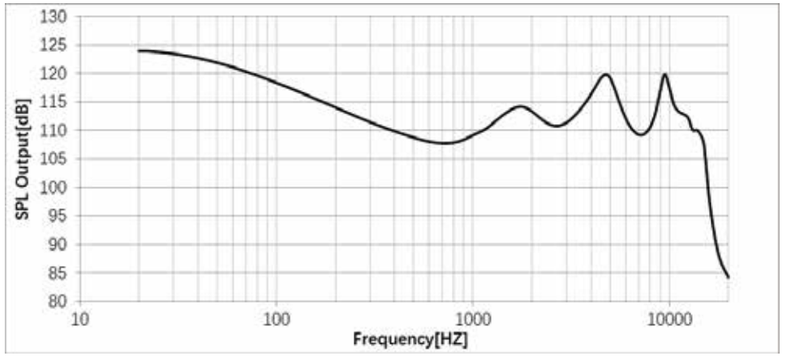

BSP130CAD32

The BSP130 is a high-performance 13.0mm dynamic loudspeaker that can be recommended for linear products in consumer electronics.

Dimensions：Φ13.0mm*3.35mm
Impedance：32Ω
Bandwidth：20~20000Hz
Rated power：20mW

Sensitivity：112dB @1000Hz
F0：270±40Hz
Nominal drive：179mV(1mW)
Coupler：IEC711

Dimensions（mm）

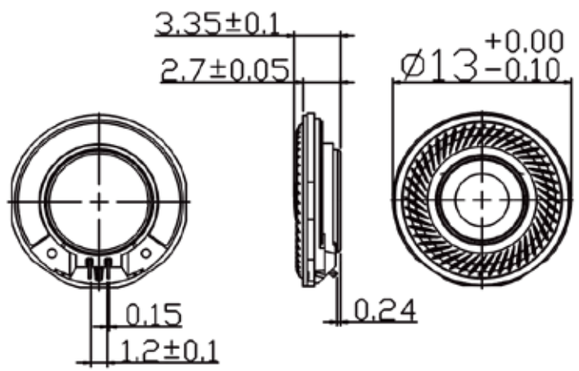

Frequency response curve

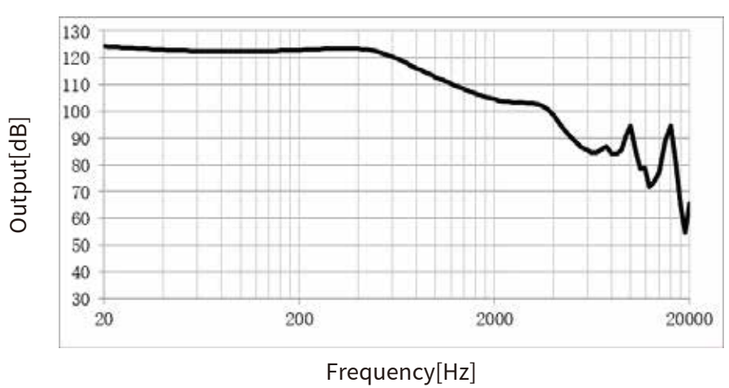

BSP160CAB20

BSP160 is a high-performance 16.0mm dynamic speaker that can be used in consumer electronic audio products that require high output.

Dimensions：Φ16.0mm*3.2mm
Impedance：20Ω
Bandwidth：20~20000Hz
Rated power：20mW

Sensitivity：118dB @1000Hz
F0：450±50Hz
Nominal drive：140mV(1mW)
Coupler：IEC711

Dimensions（mm）

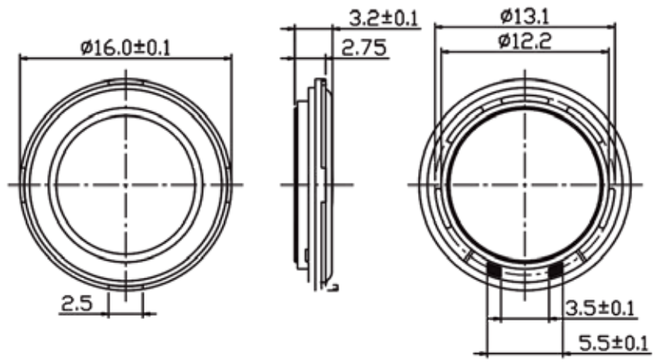

Frequency response curve

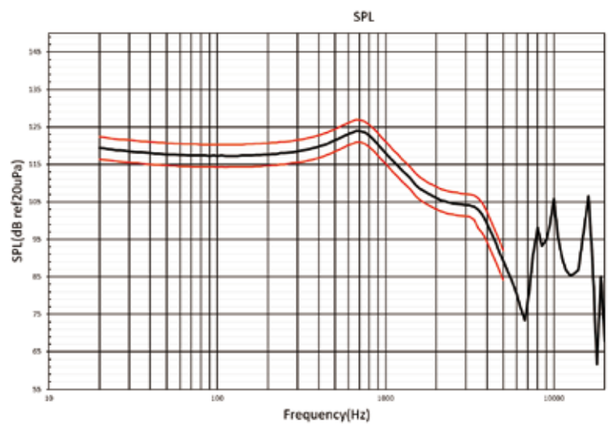

Hybrid Modules

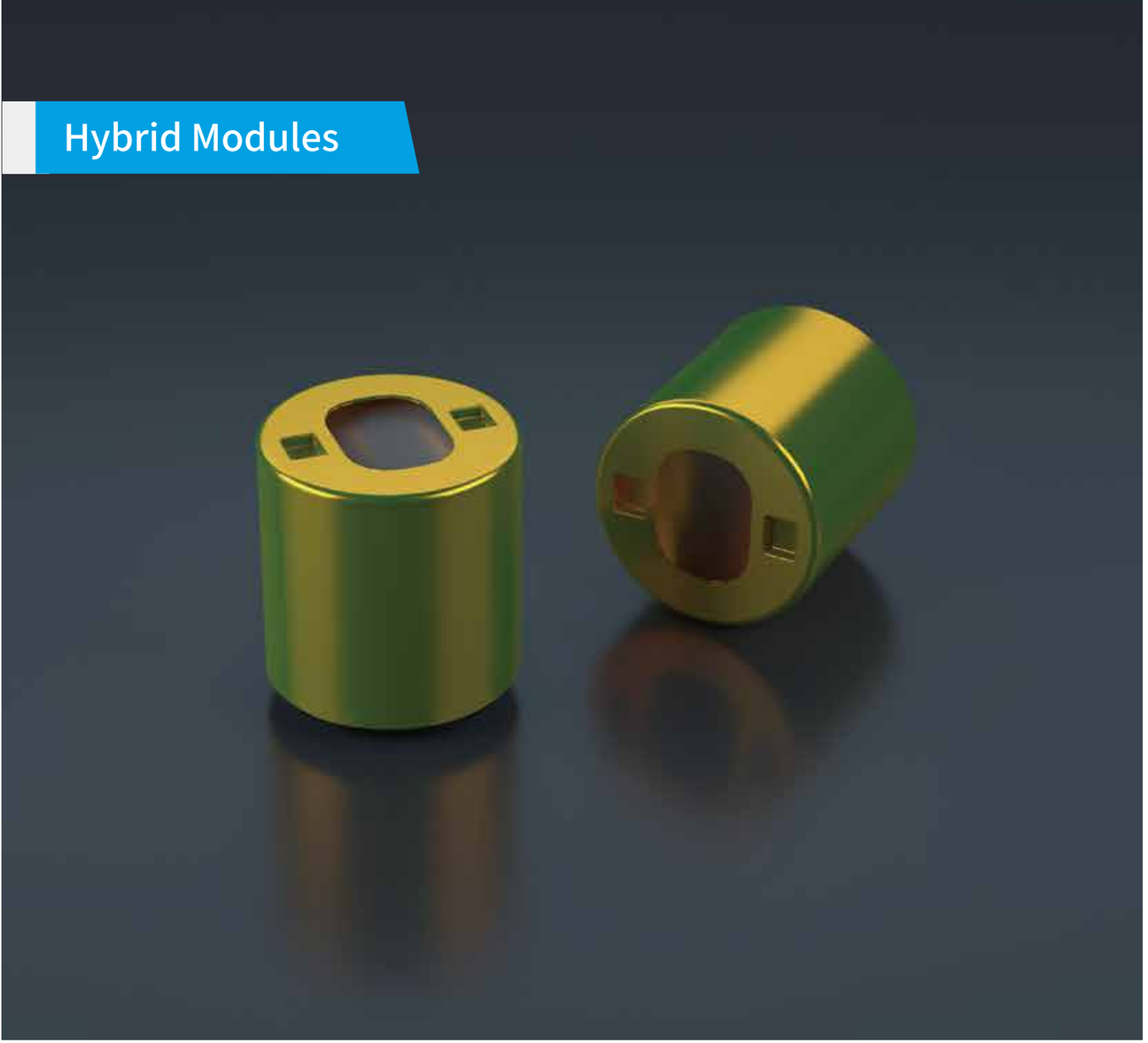

Hybrid Modules

Image	Name	Dimensions(mm)	Pages
	BVA305 hybrid module	Φ6*6.8mm	66
	BVA310 hybrid module	Φ6*6.8mm	66

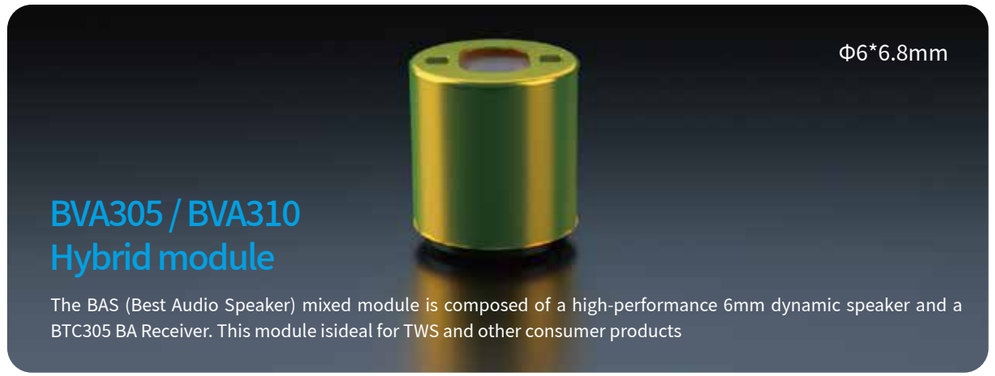

Φ6*6.8mm

BVA305 / BVA310 Hybrid module

The BAS (Best Audio Speaker) mixed module is composed of a high-performance 6mm dynamic speaker and a BTC305 BA Receiver. This module isideal for TWS and other consumer products

Model: BVA305
Dimensions：Φ6.0mm*6.8mm
DC Impedance：12.0Ω/32.0Ω
Bandwidth：20～20000Hz
Max Power：5mW
Sensitivity：109.5dB@1000Hz
Max output：119.5dB
Nominal drive：179mV
Coupler：IEC711

Frequency response curve

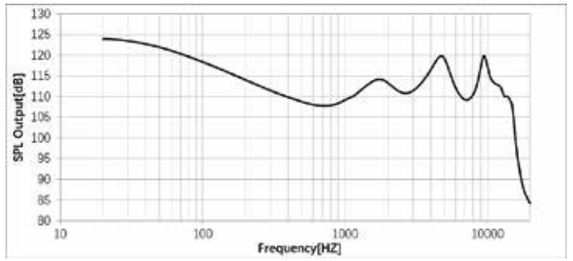

Model: BVA310
Dimensions：Φ6.0mm*6.8mm
DC Impedance：12.0Ω/32.0Ω
Bandwidth：20～20000Hz
Max Power：5mW
Sensitivity：109.5dB@1000Hz
Max output：117.5dB
Nominal drive：179mV
Coupler：IEC711

Frequency response curve

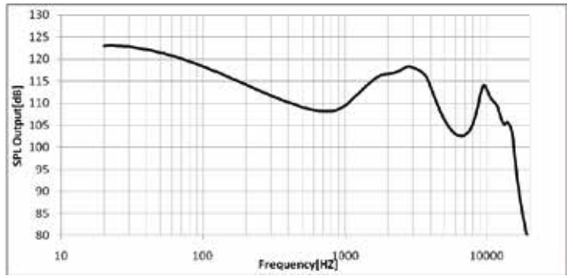

Dimensions（mm）

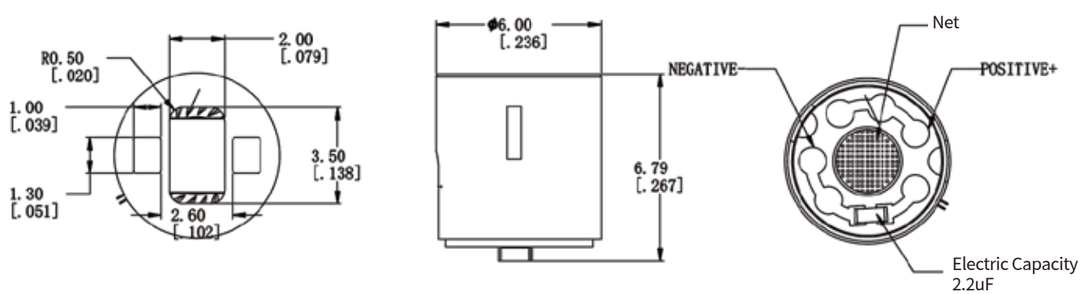

RIC Module

RIC Module

Bellsing miniature balanced armature RIC products have a small discreet appearance, excellent electro-acoustic performance and convenient plug-in design. Mainly used in Receiver in ear canal hearing aids (RIC, also known as RIE)

BVA200X24012

X: Orientation Left & Right

NEW Metal RIC

Receiver：200 Series
DC impedance：65.0Ω
Bandwidth：100～10000Hz
Sensitivity：105dB@1000Hz

Maximum output：114.0dB
Nominal drive：160mV RMS
Coupler：IEC711

Frequency response curve

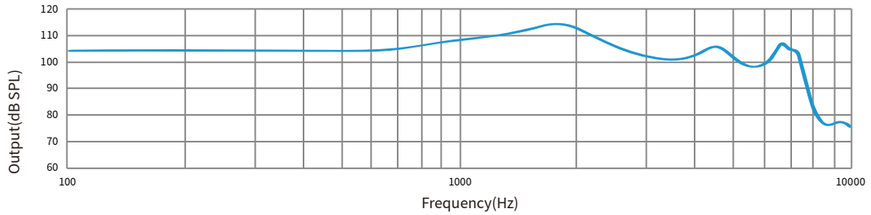

BVA321XX4002

X: Orientation Left & Right
X: Size 0&1&2&3

Receiver：321 Series
DC impedance：100.0Ω
Bandwidth：100～10000Hz
Sensitivity：100.0dB@1000Hz

Maximum output：123.0dB
Nominal drive：211mV
Coupler： IEC711

Frequency response curve

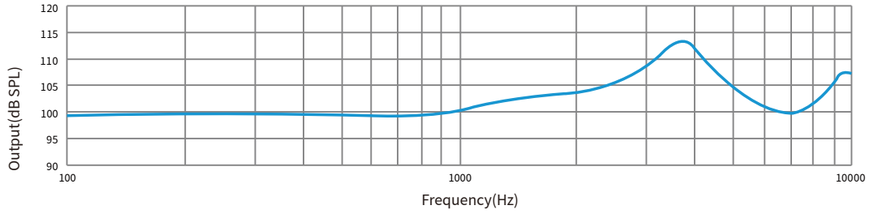

BVA350XX4002

X: Orientation Left & Right
X: Size 0&1&2&3

NEW Metal RIC

Receiver：350 Series
DC impedance：48.0Ω
Bandwidth：100～10000Hz
Sensitivity：106dB@1000Hz

Maximum output：125.0dB
Nominal drive：160mV
Coupler： IEC711

Frequency response curve

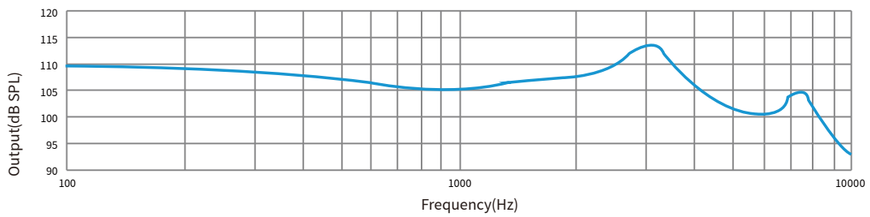

BVA530XX4002

X: Orientation Left & Right
X: Size 0&1&2&3

Receiver：530 Series
DC impedance：127.0Ω
Bandwidth：100～10000Hz
Sensitivity：103.9dB@1000Hz

Maximum output：128.0dB
Nominal drive：220mV
Coupler： IEC711

Frequency response curve

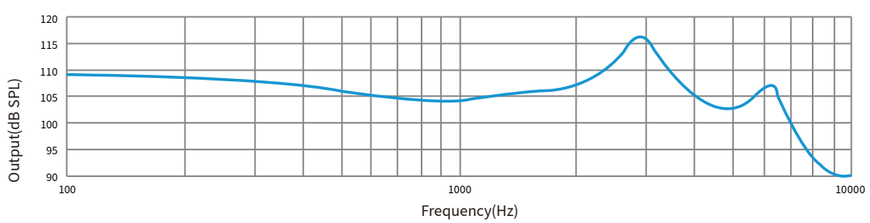

Accessories

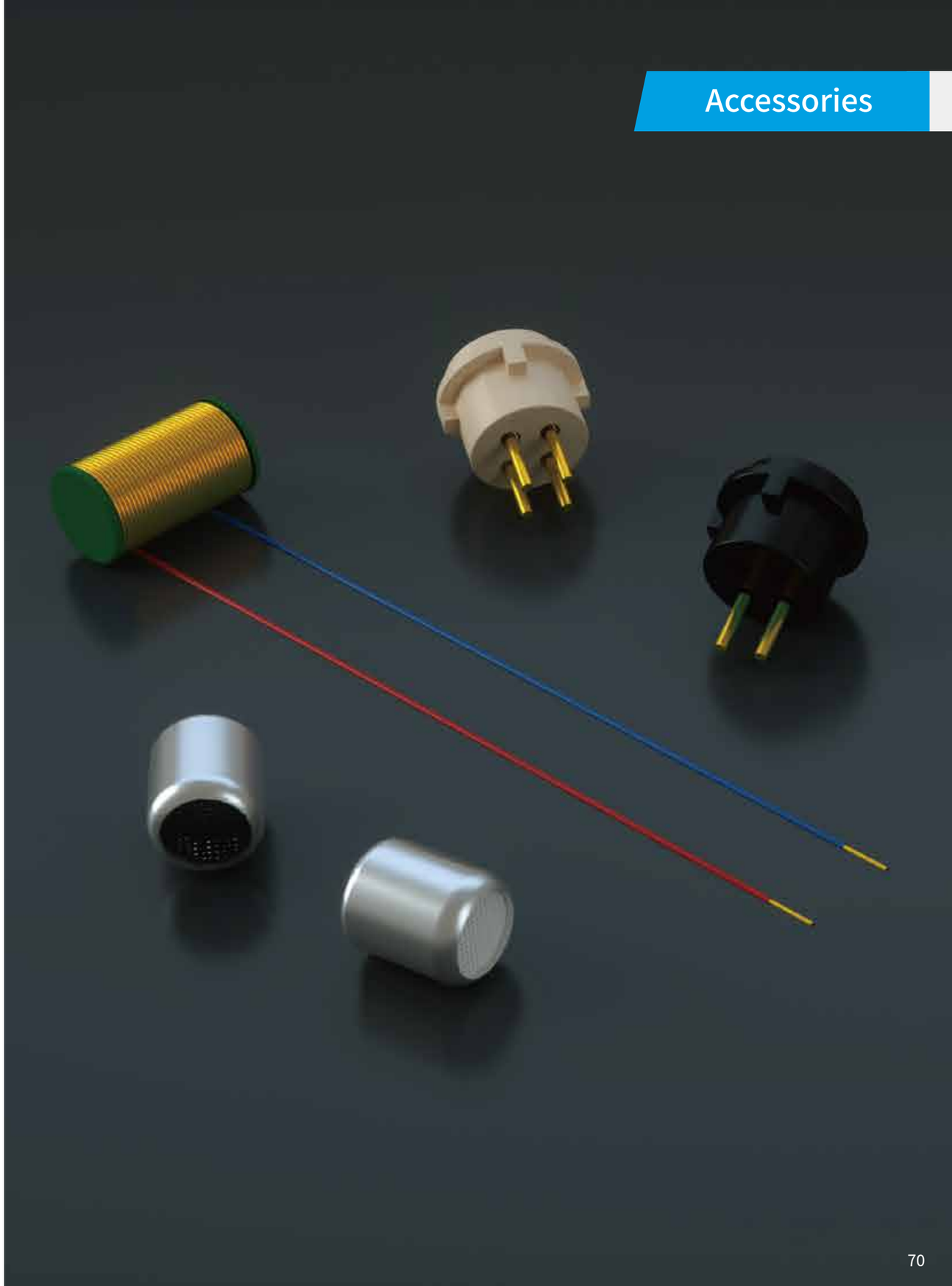

Wax Guard

Waxguard replacement set

BCS315H00000

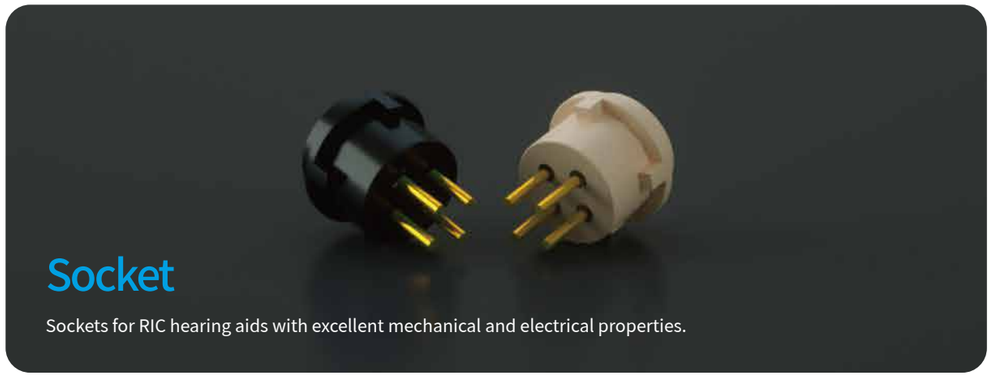

Socket

Sockets for RIC hearing aids with excellent mechanical and electrical properties.

Model	Dimensions (mm)	Pins	Color
BCS320H00002	Φ3.15*3.70	2 PIN	black
BCS320H10002	Φ3.15*3.70	2 PIN	light beige
BCS320H00004	Φ3.15*3.70	4 PIN	black
BCS320H10004	Φ3.15*3.70	4 PIN	light beige

*For more customization requirements, please consult Bellsing

Dimensions (mm) BCS320H00002/BCS320H10002

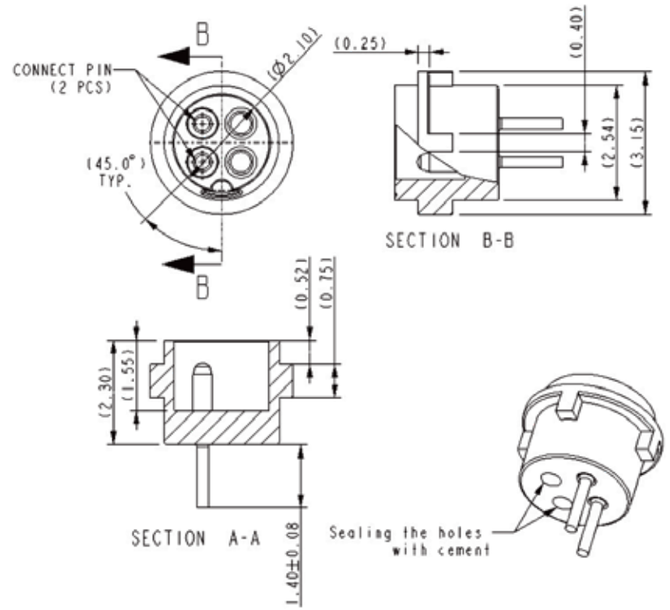

Dimensions (mm) BCS320H00004/BCS320H10004

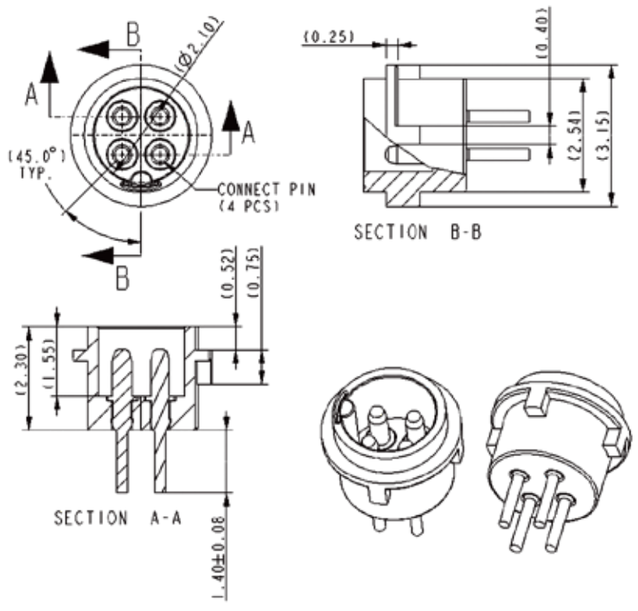

Customer Service

Bellsing adheres to the "customer-centric, innovation-oriented" development of Bellsing's development strategy and planning, guide Bellsing's Industry choice and development with market trends, focus customer needs, provide customers with the best products and services

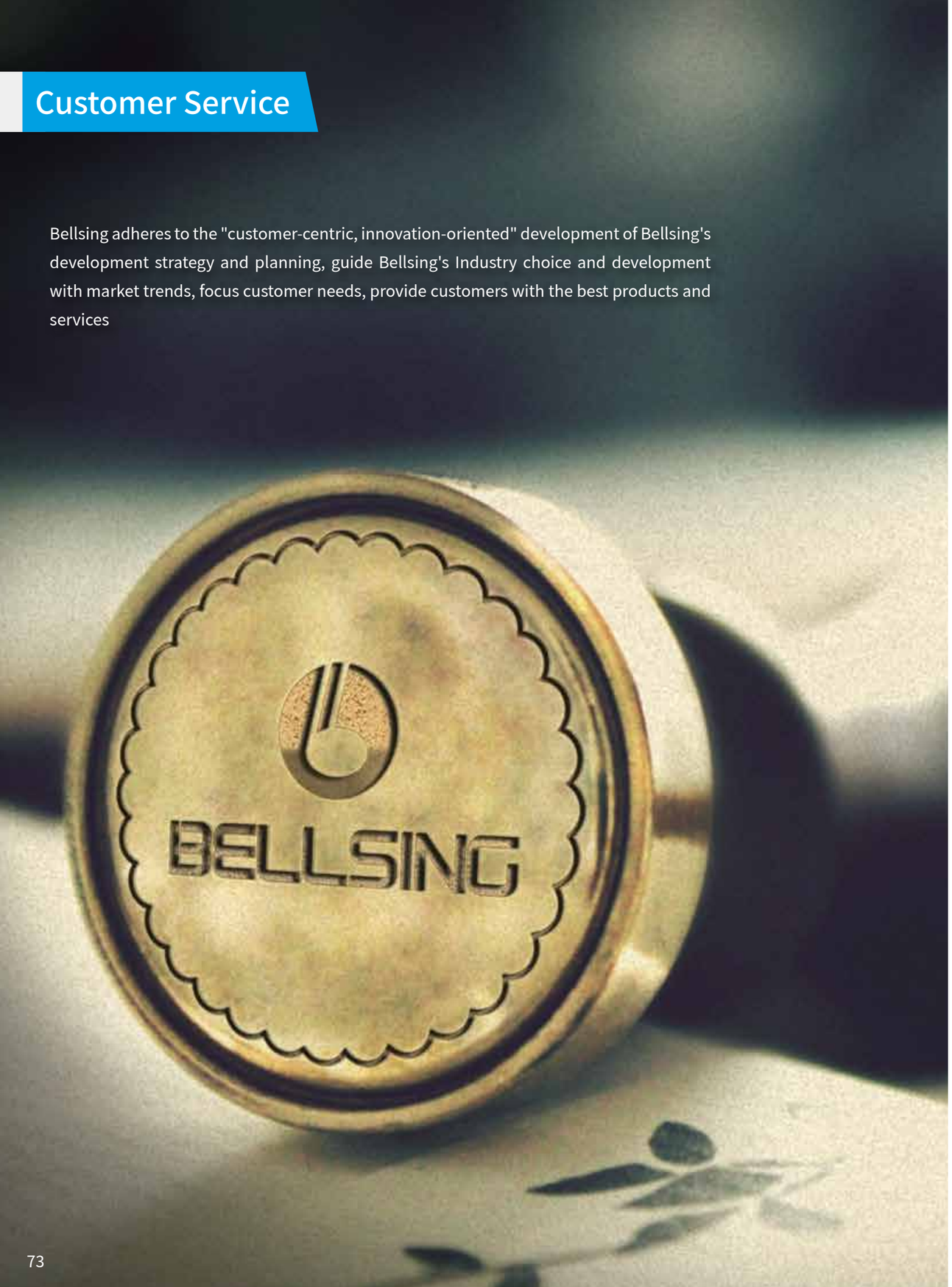

Order Rules

Lead Time: 2~3 weeks for standard products; 4~6 weeks for customized products.

The amendment of price, delivery or technical specifications shall be agreed in written form which has the same legal effect as the contract.

The commissioned product development, cooperative development, special urgent services shall all be agreed by alternative contract rather than above rules.

Service Commitments

Fast delivery:
The factory is located in Suzhou, China . We can meet fast delivery demands from customers.

Flexible customization:
Design and develop customized products based on specific requirements from customers.

Customer service:
Bellsing provides customers with professional 7x24h pre-sales and after-sales service, problem feedback and products consulting.

Appendix

Reliability Lab

Bellsing has established the world's leading acoustics and reliability laboratory in suzhou China; With X-RAY, chamber, thermal shock tester, swing machine, salt mist chamber, oven, pull Tester and other test equipment; Ability to perform tests including electrical, mechanical, environmental tests, etc.

Character	Item	Equipments	Test Conditions
Electrical	Electrical & Acoustical Characteristics	Test Machine	Reference IEC60118 Specification.
	Stress (mV) Test	Power amplifier / Signal Generator	Drive at 10mV peak/coil turn (just use one model's coil) for 1hour (drive rod units) or per multi-level stress plan for regresion(pantograph units).
Mechanical	Drop Test	Drop machine	Products from the height of 0.76M free fall, 3faces, 3edges, 1angle.
	Soldering Test (solderability)	Solder Iron	Temp for Pb-Free: 330°C.
	Solder de-Solder test	Solder Iron	Temp for Pb-Free: 330°C 5 Cycles of 2 sec. / pad
	Pull Force Test (receiver housing,leads, nylon tube, plug)	Pull Tester/Chatillon	Temperature = 23°C ± 5°C. Speed 12.5 mm/min.
	Twist Test	Tweezer or Twist Fixture	Temperature = 40°C± 2°C Humidity = 93% + 2 / -3% Duration = 4 Day Hold tube 6 mm from receiver housing, twist ±180° 100 times. One cycle = 180°CW direction, return to resting position & 180° CCW direction.
	Mechanical Shock	Shock Rail	Shock at progressively higher heights until failure. "Failure" means that a unit changes >3dB from initial, THD at nominal drive at 1/3 resonance > 10% or THD at nominal drive at 1/2 resonance > 10%.
	Push Out Force Test	Force machine	Temperature = 23°C ± 5°C. Speed 12.5 mm/min.
	Shear Force	Force machine	Temperature = 23°C ± 5°C.
Environmental	Environmental #3 Test	Chamber	63°C / 95% RH, 1008 hours total exposure, unbiased. Test at intervals of 2 days, 2 weeks, 4 weeks and 6 weeks for reference.
	Highly Accelerated Life Test (HALT)	Chamber	63°C / 95% RH, 1008 hours total exposure, but powered and driven 9dB above nominal voltage drive at motor resonant frequency (0.4V). Test at intervals of 2 days, 2 weeks, 4 weeks,6weeks for reference.
	Humidity Cyclic Test	Chamber	10 cycles of 24 hrs each 25°C / 80-100% RH for 3 h 65°C / 90-100% RH for 5 h -10°C / 0% RH for 5 h.
	Damp Heat Static	Chamber	6 cycles, 25°C and 55°C temperatures humidity per specification each cycle.
	Thermal Shock	Thermal Shock Tester	5cycls:-40°C to +63°C,15minute soaks, <30 sec. transition.
	High/Low Temperature Storage	Oven/Chamber	-40°C for 72 hours, unpowered.
	Dry Heat test	Oven/Chamber	63°C for 72 hours, unpowered.
	Salt Mist test	Salt Mist Chamber	Temperature = 35C&Humidity = 100%, NaCl 50±5g/L.Test time: 96 hours.
	Combined Test	Oven/Chamber	1. 63°C±3°C for 24 hours. 2. 5cycls:-40°C to +63°C,15minute soaks, <30 sec.transition. 3. 63°C±3°C (1kHz 0.707Vrms) for 72H.

Tube Location

Tube locations contains number 1~12 and letters. The common locations are 12S,12C,12N etc.
The numbers indicates positions on a clock as below photo shows. Letters give more information on locations and types as below chart shows.

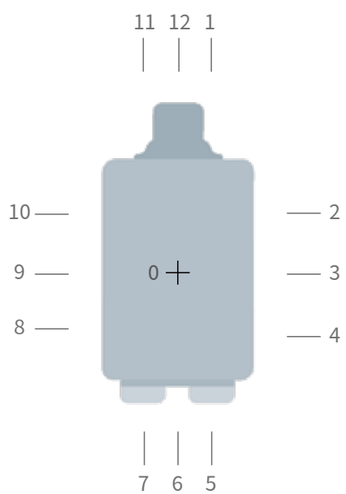

Letters

	Description	Example
Normal position	S=tube on center line	12S
	C= tube below center line	12C
	N=no tube	12N
Other	J= tube on top of the case	12J

Test Description

Acoustic Coupler

The test is based on the chamber IEC711 and IEC126 (2CC) industry standards.;
IEC711 is the standard for electroacoustic characteristics testing of earbuds and hearing aids.
The IEC-711 human ear simulator is used as the coupling cavity.;
The IEC126 standard for electroacoustic characteristics testing of hearing aids uses the IEC-126 2CC coupling cavity.

10*1mm tubing

IEC711 ear simulator

IEC126 ear simulator

Drive Level

Every BMBA receiver has its own drive voltage.
The output SPL under norminal drive is 12dB lower than the output SPL when 10% THD occurs.
The constant nominal voltage of the customer when using the finished product should not exceed 5 times that of the receiver.

Amplifier Output Impedance

Frequency response is measured using an amplifier with output impedance < 0.1ohms which is far less than receiver impedance. If larger output impedance amplifier is used in testing. The frequency response might be different.

Handling Guidelines

Operational And Storage Conditions

· Operating temperature range：-17°C～63°C
· Storage temperature range：-40°C～63°C
· Storage temperature range with 90% RH non condensing humidity: 0°C ~ 30°C
· Recommended air pressure level during storage: 500 hPa ~ 1100 hPa (Avoid rapid pressure changing).

Soldering Instructions

Soldering can be harmful for receiver if not done correctly.

Step by step instructions
1. Place the receiver in a heat sink with terminal pads facing up. BELLSING highly recommends using heat sinks to dissipate heat from receivers. When placing a receiver in a heat sink fixture, it is important not to apply excessive force to the side. This may cause damage.
2. Dip the pretinned part of wire in liquid rosin flux. Avoid excessive flux reside. Use of flux is recommended, but not required.
3. Lay tinned tip of wire on terminal pad.
4. Clean soldering iron tip on wet cellulose sponge.
5. Apply soldering iron tip to the wire and terminal pad simultaneously.
6. Keeping soldering iron in contact with wire and terminal pad until solder flows and make a good connection. Soldering temperature should not exceed 330°C.The total time that the soldering iron tip is in contact with the wire and terminal should not exceed three seconds, and the temperature of the microphone should not exceed 80°C. Remove solder iron tip and hold wire in place until soldering solidifies.
7. Visual inspections:
a. Solder has flowed smoothly over wire and terminal pads.
b. Solder shall not be connected between terminal pads or between terminal pads and the cases.

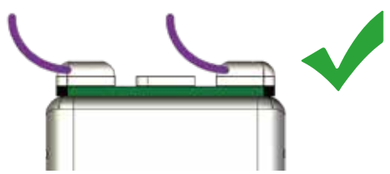

Receiver has relevant requirements for chemical contact and production operations.

Chemical liquids

Receiver can not be used with the volatile and residual liquid as the same time,because it is easy to damage the diaphragm by residual.

Force Squeezing

This will cause dents on the side of a receiver, which may cause distortion and external leaks.

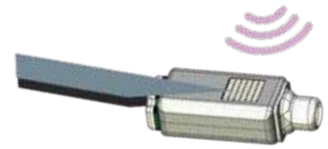

Dropping

This may cause internal damages and dents that will lead to distortion or external leaks.

Static Electricity

It may cause the receiver product to fail, receiver should be protected against static electricity during use.

Polishing

The receiver may cause product failure due to small particles of the polishing compound entering the sound port. Bellsing is not recommended for use in the secondary polishing process.

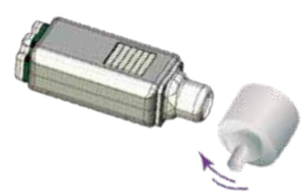

Bellsing BA Receiver Technology

Bellsing's second-generation micro-balanced armature technology architecture (BMBA 2nd Gen Receiver) based on Bellsing's independent intellectual property rights is the first generation of Bellsing's micro-balanced armature technology architecture AMBA (BMBA 2nd Gen Receiver) Advanced Miniature Balanced Armature) evolved through the iterative upgrade of basic materials, mechanical structures, machining processes and performance simulations. Compared to traditional MBA (Miniature Balanced Armature) miniature balanced armature receivers, it has superior product performance (higher Resolution, stronger output, lower distortion, lower power consumption, better protection against mechanical shock and electromagnetic radiation shielding, lower cost and lower cost compared to the first generation Bellsing AMBA architecture miniature balanced armature receiver It is easier to scale and automate production.

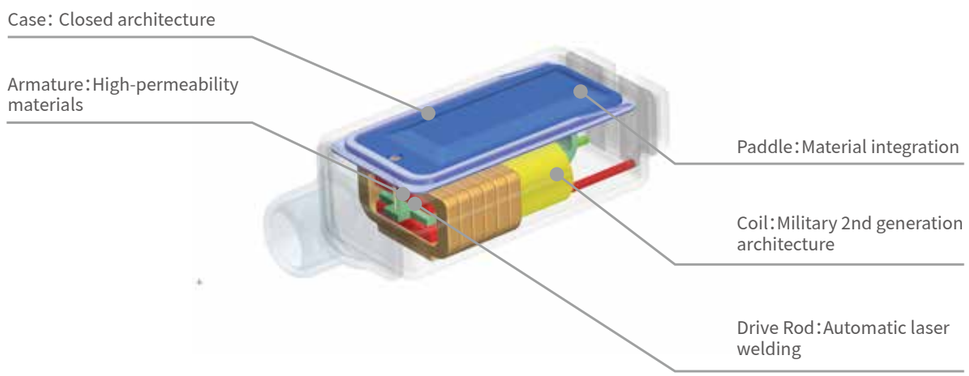

BMBA 2nd Gen Receiver

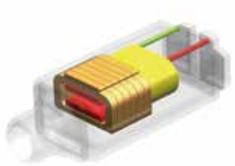

Bellsing BMBA Core

Bellsing μ Level “U” type Armature

Bellsing PI composite diaphragm